INSTALLATION & OPERATION MANUAL

Atlas Platinum PVL15

15,000 lb. Capacity
Two-Post Overhead Lift



Atlas Automotive Equipment
www.atlasautoequipment.com
(866) 898-2604

Revised 11/21/2019

Read this entire manual before operation begins.

Record below the following information which is located on the serial number data plate.

Serial No. _____
Model No. _____
Date of Installation _____

Contents

General Information 9
Product Identification 12
Packing / Transport / Storage 13
Lift Description 15
Technical Specification 17
Safety 24
Installation 28
Operation And Use 38
Maintenance 41
Troubleshooting 43
Additional Information 44
Part List 53
Warranty 60

Operations And Maintenance Manual: 2-Post Lifts

Please read this manual in its entirety before installing or operating your lift. By proceeding, you agree that you fully understand the contents of this manual and the installation, operation, and maintenance instructions contained within. Please deliver this manual to the lift owner and/or operator along with all other documentation provided with the lift. Failure to operate this equipment as intended may cause injury or death.

Check for any freight damages. The shipment should be thoroughly inspected as soon as it is received. The signed bill of lading is acknowledgement by the carrier of receipt in good condition of shipment covered by your invoice. If any of the goods called for on your bill of lading are shorted or damaged, do not accept to unload until the carrier makes a notation on the freight bill of the missing or damaged goods. Do this for your own protection. Check the contents of the accessory and hardware boxes to make sure no parts are missing.

Important Notice And Operating Conditions

- This lift is not intended for outdoor use. It is intended for indoor installation only, with an operating temperature range of 41 – 104 °F (5 – 40 °C).
- Concrete flooring must be 6” minimum thicknesses with 3,000 psi. Do not install on asphalt or other similar unstable surface type.
- Check ceiling height and electrical requirements as described in this manual.
- Reference ANSI/ALI ALIS, Safety Requirements for Installation and Service of Automotive Lifts.
- Consult a qualified expert to address all seismic load concerns and other local or state requirements.
- Atlas Automotive Equipment and its distributors will assume no liability for loss or damage of any kind, express or implied, resulting from improper installation, operation or maintenance of this lift.

Owner, Operator, & Employer Responsibilities:

- Shall ensure that lift operators are qualified and that they are trained in the safe use and operation of the lift using the manufacturer's operating instructions; ALI/SM 93-1, ALI Lifting it Right safety manual; ALI/ST-90 ALI Safety Tips card; ANSI/ALI ALOIM-2008, American National Standard for Automotive Lifts - Safety Requirements for Operation, Inspection and Maintenance; ALI/WL Series, ALI Uniform Warning Label Decals/Placards; and in the case of frame engaging lifts, ALI/LP-GUIDE, Vehicle Lifting Points/Quick Reference Guide for Frame Engaging Lifts.
- Shall establish procedures to periodically inspect the lift in accordance with the lift manufacturer's instructions or ANSI/ALI ALOIM-2008, American National Standard for Automotive Lifts - Safety Requirements for Operation, Inspection and Maintenance; and the Employer shall ensure that the lift inspectors are qualified and that they are adequately trained in the inspection of the lift.
- Shall establish procedures to periodically maintain the lift in accordance with the lift manufacturer's instructions or ANSI/ALI ALOIM-2008, American National Standard for Automotive Lifts - Safety Requirements for Operation, Inspection and Maintenance; and the Employer shall ensure that the lift maintenance personnel are qualified and that they are adequately trained in the maintenance of the lift.
- Shall maintain the periodic inspection and maintenance records recommended by the lift manufacturer's instructions or ANSI/ALI ALOIM-2008, American National Standard for Automotive Lifts - Safety Requirements for Operation, Inspection and Maintenance.
- Shall display the lift manufacturer's operating instructions; ALI/SM 93-1, ALI Lifting it Right safety manual; ALI/ST-90 ALI Safety Tips card; ANSI/ALI ALOIM-2008, American National Standard for Automotive Lifts - Safety Requirements for Operation, Inspection and Maintenance; ALI/WL Series, ALI Uniform Warning Label Decals/Placards; and in the case of frame engaging lifts, ALI/LP- GUIDE, Vehicle Lifting Points/Quick Reference Guide for Frame Engaging Lifts in a conspicuous location in the lift area convenient to the operator.
- Shall provide necessary lockout/tagout means for energy sources per ANSI Z244.1-1982 (R1993), Safety Requirements for the Lockout/Tagout of Energy Sources, before beginning any lift repairs and maintenance.
- Shall not modify the lift without the prior written consent of the manufacturer.

IMPORTANT SAFETY INSTRUCTIONS
Please read carefully

- Read all instructions and warnings thoroughly before servicing, or maintaining the lift.
- Inspect the lift daily. Never operate if there are broken or damaged parts or if the lift is malfunctioning.
- Do not operate if there are damaged cords or if any piece of the equipment has been dropped or damaged until it has been examined by a qualified professional.
- Do not touch hot parts as burns can occur.
- Keep area well lit at all times and do not use in damp or wet locations.
- Do not let any cords come in contact with hot manifolds or moving blades.
- A cord with a current rating equal to or more than that of the equipment should be used if an extension cord is necessary. Cords rated for less current than the equipment may overhead. Be careful to avoid putting in an area where it could be tripped over or interfered with.
- Always unplug equipment when not in use. Do not attempt to grab the cord, grasp plug to disconnect.
- Allow equipment to cool completely before storing away. Loop cord loosely around the equipment when storing.
- To reduce the risk of fire, never operate near open containers of flammable liquids (for example, gasoline).
- Adequate ventilation should be provided when working on or operating internal combustion engines.
- Always keep loose clothing, hair, fingers, and all parts of the body away from any moving parts.
- To reduce the risk of electric shock, never use on wet surfaces or expose to rain.
- Always wear safety glasses. Everyday glasses are not safety glasses and do not provide adequate protection.
- Use only as described in this manual – use only Atlas Automotive Equipment optional accessories and attachments.
- Never attempt to overload the lift. The rated capacity is shown on the identification label.
- Never modify the lift or attempt to override the operating controls.
- Do not attempt to raise a vehicle until installation is completed per instructions in this manual.
- Keep hands and feet clear of any moving parts and avoid pinch points.

- Only trained and qualified personnel are to operate, maintain, service or repair the lift.
- Always use all four arms to raise and support the vehicle.
- Never work under or near the lift unless the mechanical safety locks are securely engaged.
- Always keep the work area free of spills and debris.
- Label indicated the safety latches do not automatically reset, please push UP bottom to get the safety latches reengaged.
- Never permit anyone in a vehicle or on the lift when it is either being raised or lowered.
- Always check for obstructions before lowering the lift.
- Never remove hydraulic fittings while the lift is under pressure.
- Clear the work area immediately if a vehicle is in danger of falling.
- Do not hit or drive over arms or adapters. Always provide an unobstructed entrance between columns prior to loading vehicle onto the lift.
- Always ensure that the lift is grounded while in use to protect the operator from electric shock.
- Disconnect power unit before performing any electrical repairs.
- Avoid rocking a vehicle while it is on the lift.
- Always use safety and/or support stands when removing or installing heavy vehicle components.
- Never remove or tamper with safety components.
- Use common sense and always stay alert.
- **SAVE THESE INSTRUCTIONS**

Record the following information which can be located on the serial number data plate: Serial No, Model No, and Date of Installation.

The Following Are Included With Your Lift:

- ALI/SM Lifting it Right
- ALI/ST Safety Tips
- ALI/ALOIM
- ALI/ALIS
- ALI/LPG Lifting Point Guide
- Attachment/accessory Notice labels

Printing Characters And Symbols

Throughout this manual, the following symbols and printing characters are used to facilitate reading:

	Indicates the operations which need proper care
	Indicates prohibition
	Indicates a possibility of danger for the operators
⇦	Indicates the direction of access for motor vehicles to the lift
BOLD TYPE	Important information

	**WARNING: before operating the lift and carrying out any adjustment, read carefully chapter 7 “installation” where all proper operations for a better functioning of the lift are shown.**

General Information

This chapter contains warning instructions to operate the lift properly and prevent injury to operators or objects. This manual has been written to be used by shop technicians in charge of the lift (operator) and routine maintenance technician (maintenance operator). The operating instructions are considered to be an integral part of the machine and must remain with it for its whole useful life.

Read every section of this manual carefully before operating the lift and unpacking it since it gives helpful information about:

- **safety of people**
- **safety of the lift**
- **safety of lifted vehicles**

The company is not liable for possible problems, damage, accidents, etc. resulting from failure to follow the instructions contained in this manual.

Only skilled technicians of AUTHORISED DEALERS or SERVICE CENTRES AUTHORISED by the manufacturer shall be allowed to carry out lifting, transport, assembling, installation, adjustment, calibration, settings, extraordinary maintenance, repairs, overhauling and dismantling of the lift.

The manufacturer is not responsible for possible damage to people, vehicles or objects if said operations are carried out by unauthorized personnel or the lift is improperly used.

Any use of the machine made by operators who are not familiar with the instructions and procedures contained herein shall be forbidden.

1.1 Manual Keeping

For a proper use of this manual, the following is recommended:

- Keep the manual near the lift, in an easily accessible place.
- Keep the manual in an area protected from the damp.
- Use this manual properly without damaging it.
- Any use of the machine made by operators who are not familiar with the instructions and procedures contained herein shall be forbidden.

This manual is an integral part of the lift: it shall be given to the new owner if and when the lift is resold.

1.2 Obligation In Case Of Malfunction

	**In case of machine malfunction, follow the instructions contained in the following chapters.**

1.3 Cautions For The Safety Of The Operator

Operators must not be under the influence of sedatives, drugs or alcohol when operating the machine.

	**Before operating the lift, operators must be familiar with the position and function of all controls, as well as with the machine features shown in the chapter “Operation and use”**

1.4 Warnings

	**Unauthorized changes and/or modifications to the machine relieve the manufacturer of any liability for possible damages to objects or people. Do not remove or make inoperative the safety devices, this would cause a violation of safety at work laws and regulations.**

	**Any other use which differs from that provided for by the manufacturer of the machine is strictly forbidden.**

	**The use of non genuine parts may cause damage to people or objects**

1.5 Scrapping

When your machine's working life is over and it can no longer be used, it must be made inoperative by removing any connection to power sources.

These units are considered as special waste material, and should be broken down into uniform parts and disposed of in compliance with current laws and regulations.

If the packing are not polluting or non-biodegradable, deliver them to appropriate handling station.

Declaration Of Warranty And Limitation Of Liability

The manufacturer has paid proper attention to the preparation of this manual. However, nothing contained herein modifies or alters, in any way, the terms and conditions of manufacturer agreement by which this lift was acquired, nor increase, in any way, manufacturer's liability to the customer.

To The Reader

Every effort has been made to ensure that the information contained in this manual is correct, complete and up-to date. The manufacturer is not liable for any mistakes made when drawing up this manual and reserves the right to make any changes due the development of the product, at any time.

Product Identification

The identification data of the machine are shown in the serial plate placed on the power side column.

	**The removal of the serial plate is strictly forbidden.**

Machines may be updated or slightly modified from an aesthetic point of view and, as a consequence, they may present different features from these shown, this without prejudicing what has been described herein.

2.1 Warranty Certificate

The warranty is valid for a period of 12 months starting from the date of the purchase invoice.

The warranty will come immediately to an end when unauthorized modifications to the machine or parts of it are carried out.

The presence of defects in workmanship must be verified by the Manufacturer's personnel in charge.

2.2 Technical Servicing

For all servicing and maintenance operations not specified or shown in these instructions, contact your Dealer where the machine has been bought or the Manufacturer's Commercial Department.

Packing / Transport / Storage

Only skilled personnel who are familiar with the lift and this manual shall be allowed to carry out packing, lifting, handling, transport and unpacking operations.

3.1 Packing

The packing of the lift is shown in the figure 1: N. 1 base unit packed in a steel frame, wrapped up in non-scratch material, including the accessory box, the power unit.

The package weight is about *3306 lbs.*

If requested, optional accessories are available to satisfy each customer's requirements.

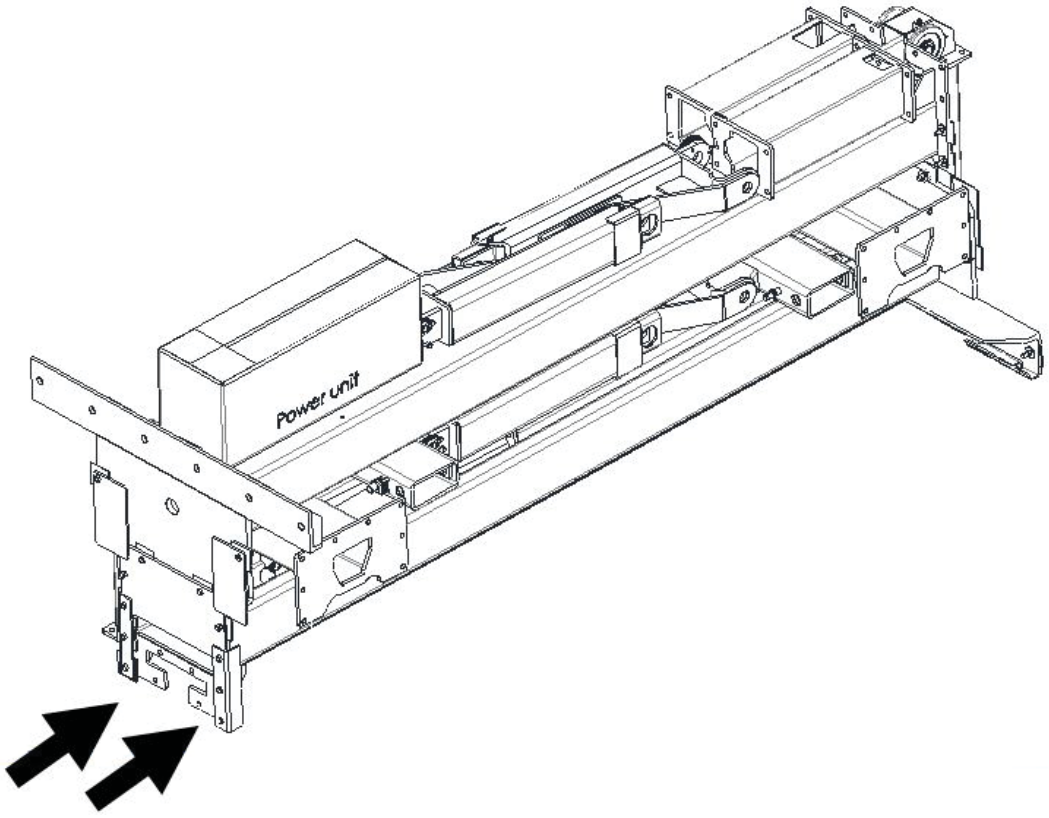

Figure 1 - Packages

3.2 Lifting And Handling

When loading/unloading or transporting the equipment to the site, be sure to use suitable loading (e.g. cranes, trucks) and hoisting means. Be sure also to hoist and transport the components securely so that they cannot drop, taking into consideration the package's size, weight and centre of gravity and it's fragile parts.

3.3 Storage And Stacking Of Packages

Packages must be stored in a covered place, out of direct sunlight and in low humidity, at a temperature between -10°C and +40°C.

3.4 Delivery And Check Of Packages

When the lift is delivered, check for possible damages due to transport and storage; verify that what is specified in the manufacturer's confirmation of order is included. In case of damage in transit, the customer must immediately inform the carrier of the problem.

Packages must be opened paying attention not to cause damage to people (keep a safe distance when opening straps) and parts of the lift (be careful the objects do not drop from the package when opening).

Lift Description

Lift Description (Ref. Figure 2)

The lift is suitable for lifting motor vehicles having maximum weight as described in the nameplate on the power side column of the lift.

All mechanical parts such as columns, carriages and lift arms have been built in steel plate to make the frame stiff and strong while keeping a low weight.

The electro hydraulic operation is described in detail in chapter 8.

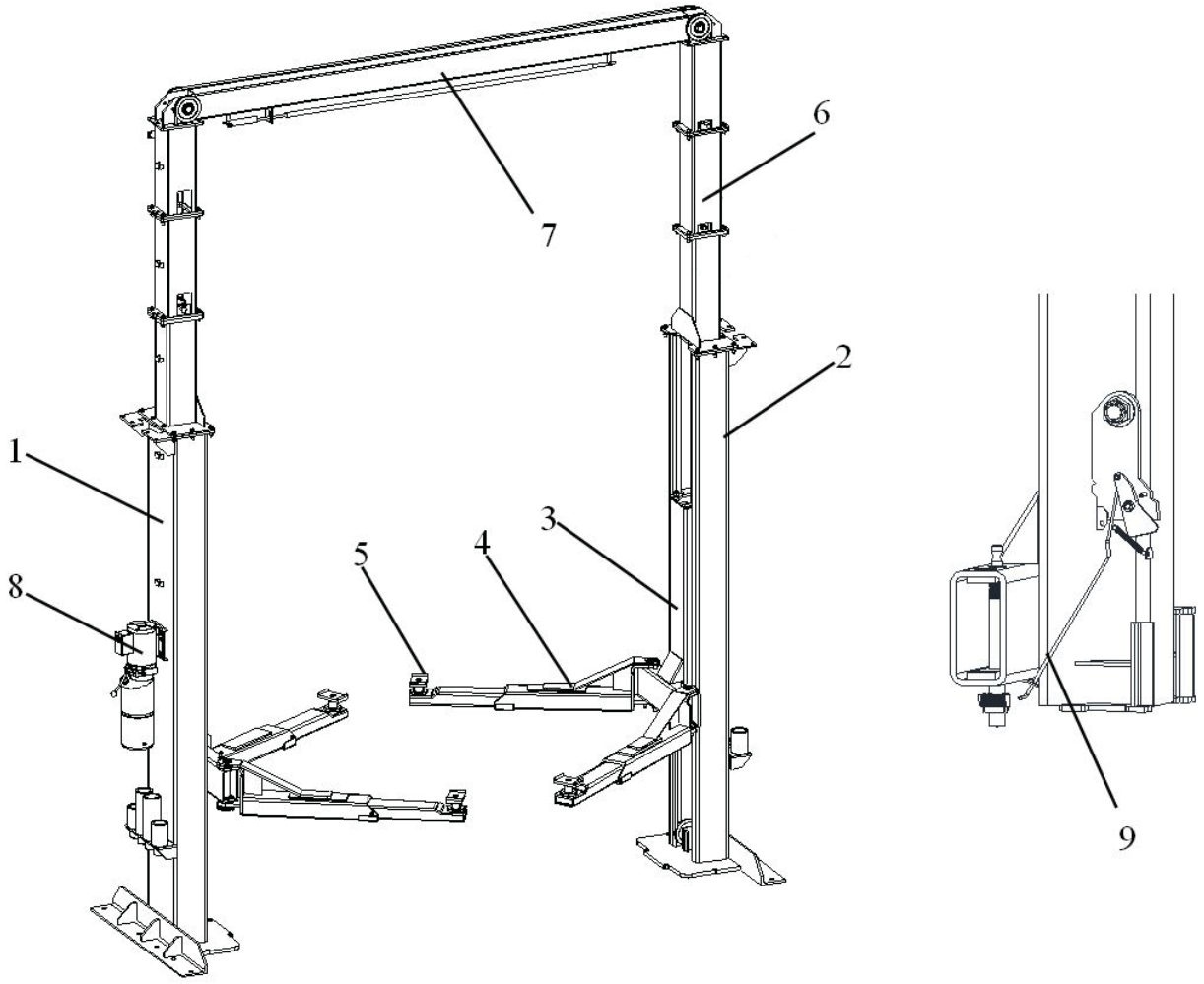

Figure 2 – Lift

This chapter describes the lift's principal elements, allowing the user to be familiar with the machine.

As shown in figure 2, the lift is composed of two columns: power-side column (1) and off-side column (2), each equipped with a carriage (3) and a pair of lifting arms (4) with the adaptor (5) anchored to the ground by means of the column base.

The (*sold separately*) column extension (6) can be ordered as an option to accommodate taller vehicles.

The overhead beam (7) is equipped with the anti-crush safety bar and an overhead cut-off switch for protection of the vehicle roof.

Raising motion is carried out by pushing the lifting button on the power unit (8), which delivers the hydraulic fluid to cylinders inside the columns.

The mechanical safety release is carried out by pulling out the lock release rod (9) on each carriage.

Lowering motion is controlled by pushing the lowering lever on the power unit and carried out under the weight of the load lifted.

The synchronization is controlled by the equalizer cables.

The arm locks can be engaged automatically when the lift is raised.

Technical Specification

5.1 Size And Main Features (Ref. Figure 3)

CAPACITY	**6800kg (15,000lbs)**
Max. lifting height	**72 2/3" (1844mm)**
Min. lowered height	4 2/3" (118mm)
Overall height – taller version (Option)	198 1/2" (5040mm)
Overall height – standard version	174 1/2" (4430mm)
Clearance between columns	105 1/8" (2670 mm)
Lifting time	80 s
Lowering time with full load	40 s
Noise level	75 dB(A)/1m
Working temperature	5 °C - 40 °C
Average weight of package – tallest version	1500kg (3306lbs)

5.2 Electric Motor

Voltage	208V-240V/50Hz/60Hz/1Ph
Power	2HP
N° Poles	2
Speed	3450 rpm
Motor enclosure type	B14
Insulation class	IP 54

Motor connection must be carried out referring to the attached wiring diagrams (fig.6). The motor direction of rotation is shown in the label placed on the motor. Before use of the lift, make sure to check if the motor specification shown in the nameplate of the motor conforms to the local electric supply.

5.3 Pump

Type	Gear
Flow rate	2.7 cm^3/g
Continuous working pressure	145 bar

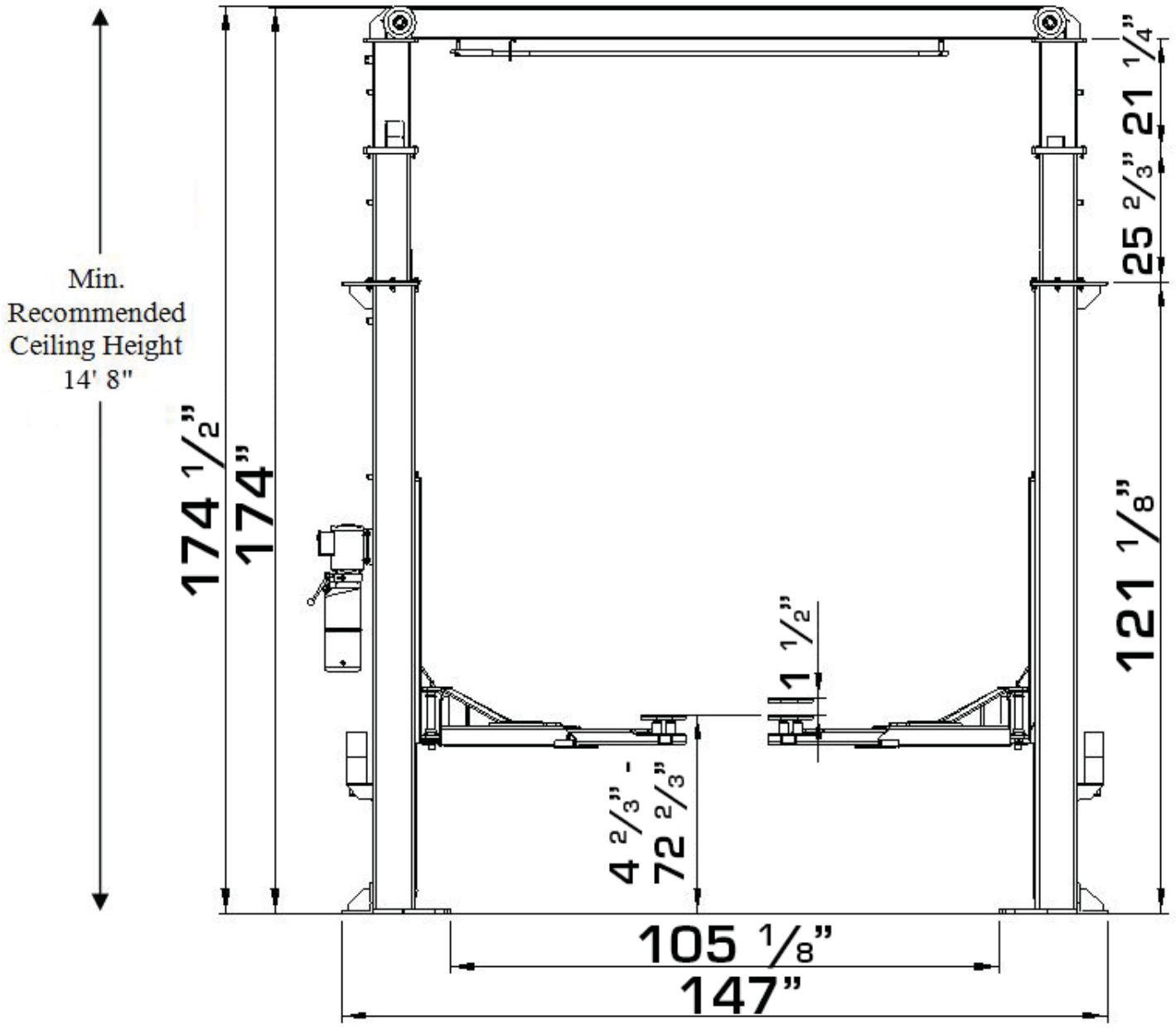

Figure 3a – Standard Version

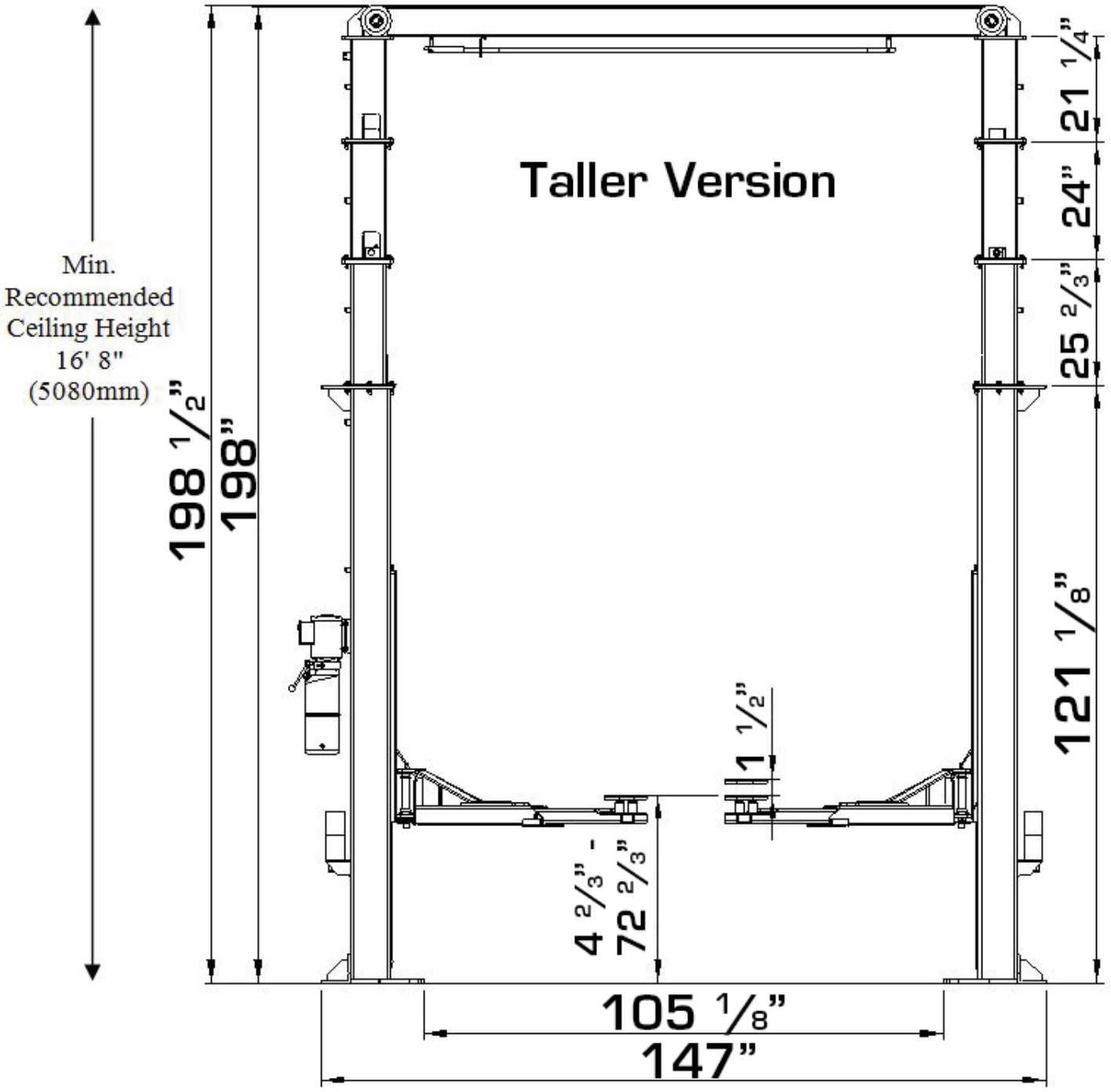

Figure 3b – Taller Version (Option)

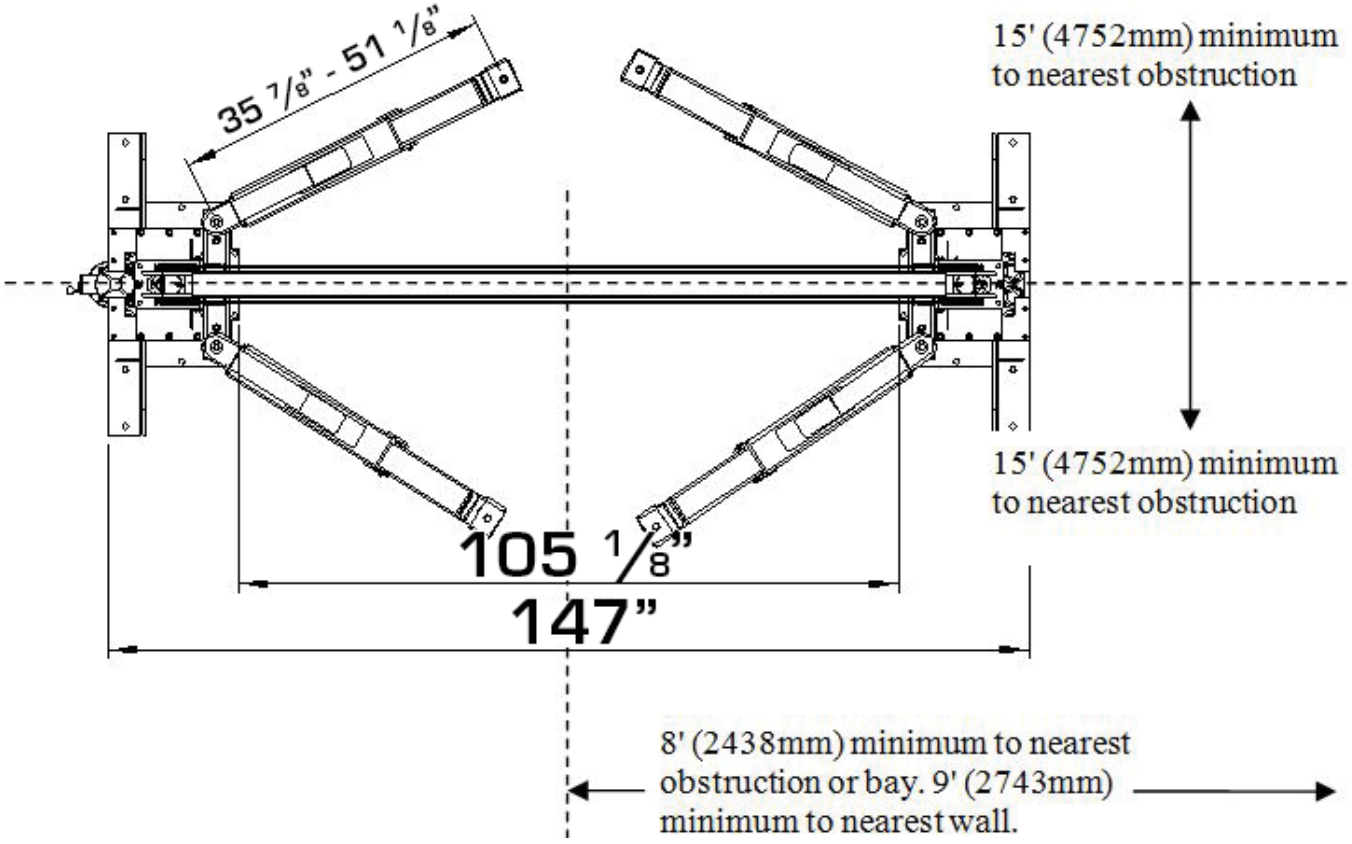

Figure 3c – Layout

5.4 Hydraulic Power Unit

The power unit is equipped with:

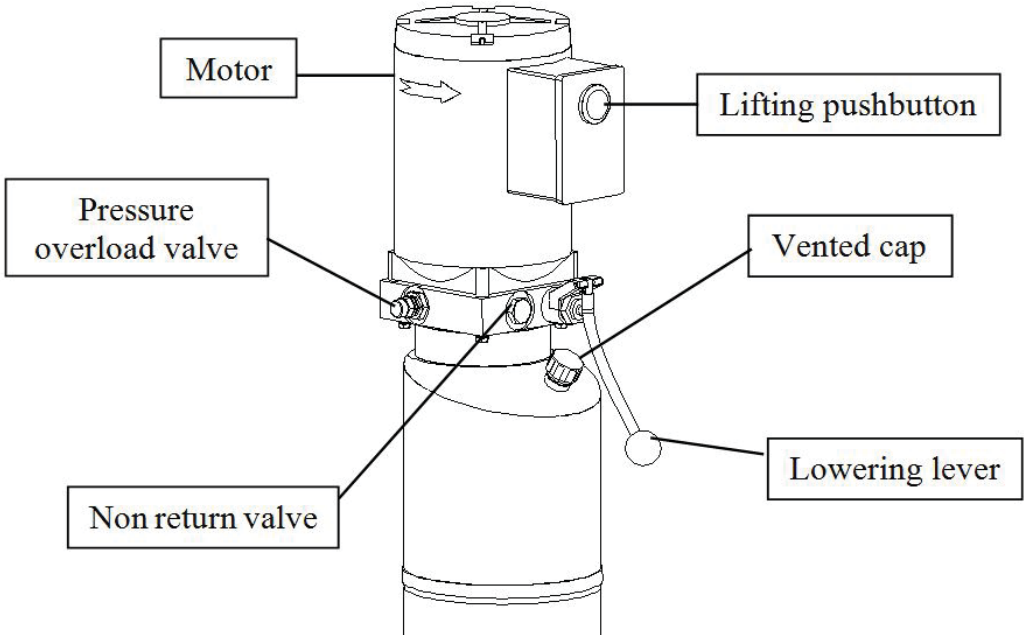

Figure 4 – Hydraulic Power Unit

5.5 Oil

Use wear proof oil for hydraulic drive, in conformity with *ISO 6743/4* rules (HM class). The oil with features similar to those shown in the table is recommended.

Test standards	**Features**	**Value**
ASTM D 1298	Density 20°C	0.8 kg/l
ASTM D 445	Viscosity 40°C	32 cSt
ASTM D 445	Viscosity 100°C	5.43 cSt
ASTM D 2270	Viscosity index	104 N°
ASTM D 97	Pour point	~ 30 °C
ASTM D 92	Flash point	215 °C
ASTM D 644	Neutralization number	0.5 mg KOH/g



Change hydraulic oil at 1 year intervals

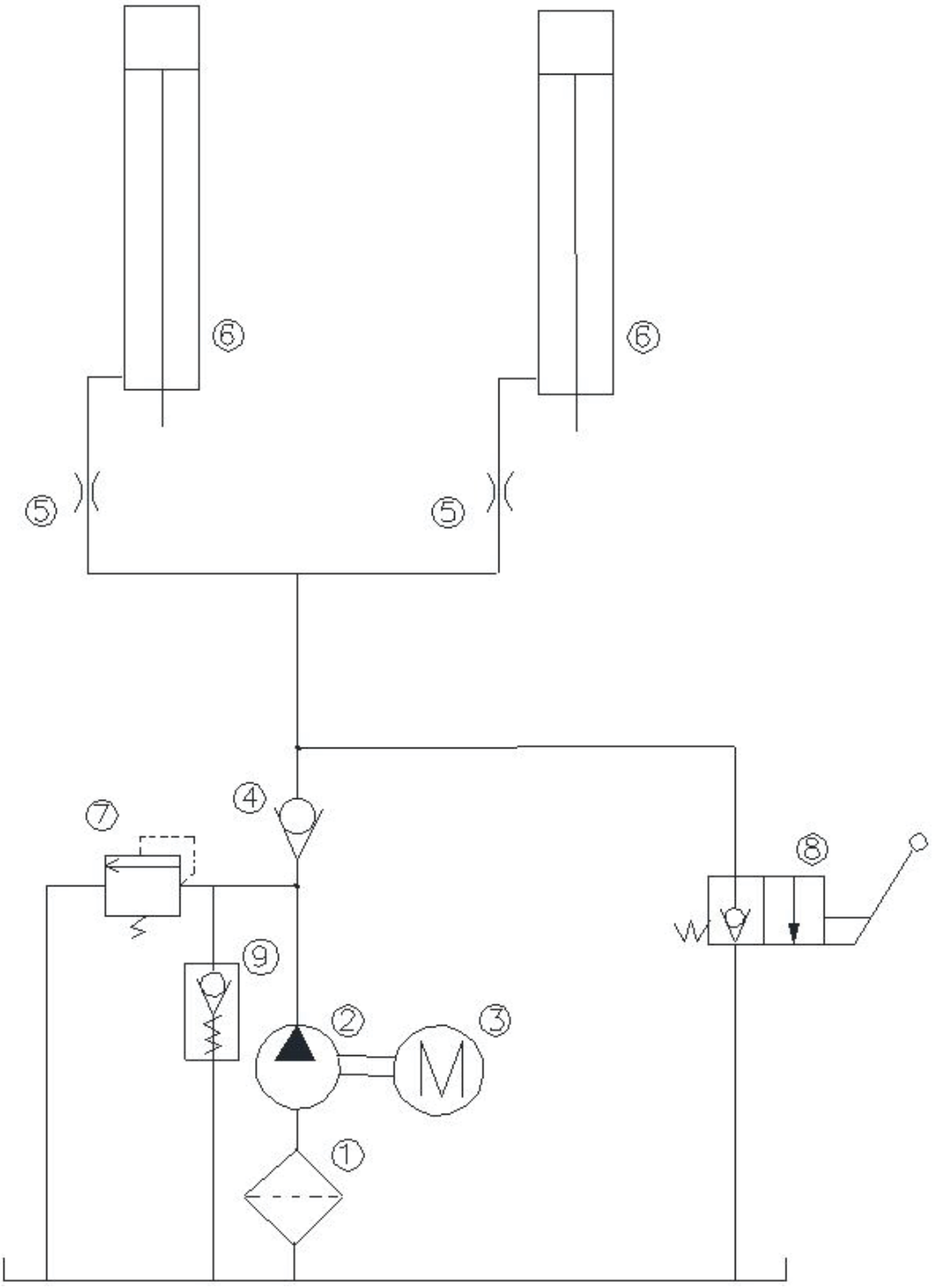

Figure 5 - Hydraulic Plan

1	Oil filter	6	Hydraulic cylinder
2	Gear pump	7	Pressure overload valve
3	Motor	8	Manual lowering valve
4	Non return valve	9	Startup valve
5	Flow restrictor		

WIRING INSTRUCTIONS

To install power unit without relay:

Connect L1 incoming power line to black pushbutton switch wire #9.
Connect L2 incoming power line to white motor wire #5.
Connect incoming green ground wire to green ground motor wire.
If *using* overhead switch:
    Connect one overhead switch wire to black switch wire #3.
    Connect the other overhead wire to black motor wire #7.
If *not using* overhead switch:
    Connect the black switch wire #3 from pushbutton switch to black motor wire #7.

To install power unit with relay:

Connect L1 incoming power line to black relay wire #6 & black pushbutton wire #9.
Connect L2 incoming power line to white relay wire #2
Connect incoming green ground wire to green ground motor wire.
Connect white relay #4 to white motor wire #5.
Connect black relay wire #8 to black motor wire #7.
If *using* overhead switch:
    Connect one overhead switch wire to black switch wire #3
    Connect the other overhead wire to red relay wire #1
If *not using* overhead switch:
    Connect the black switch wire #3 from pushbutton switch to red relay wire #1.

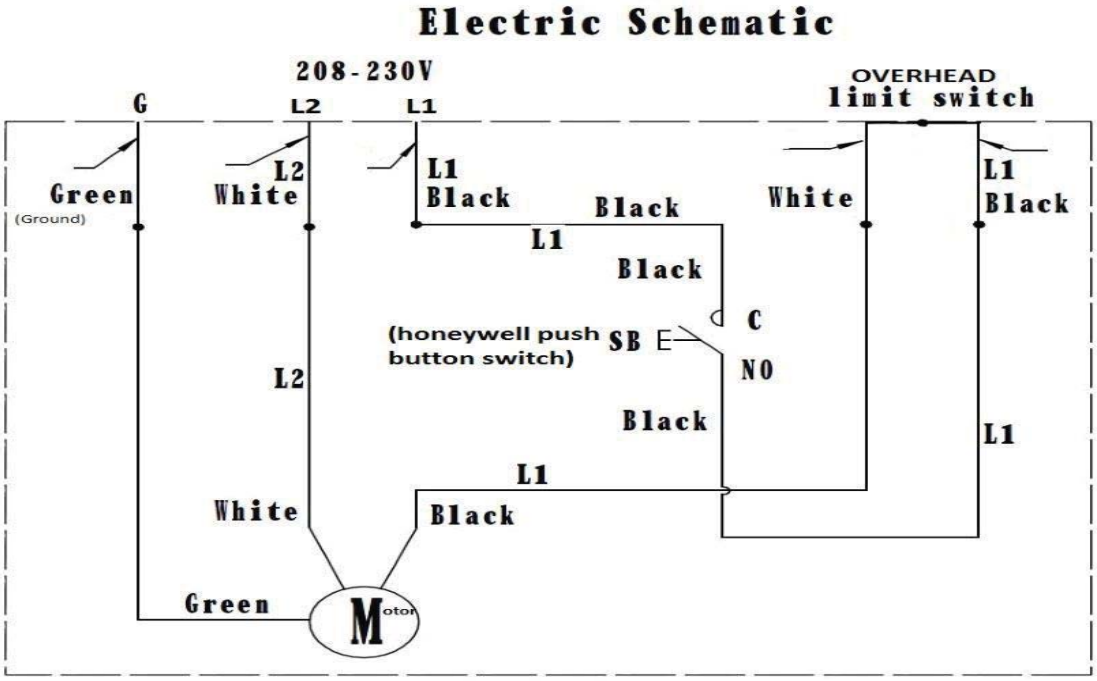

Figure 6 – Electrical Diagram (220V/50Hz/60Hz/1Ph)

Safety

Read this chapter carefully and completely because it contains important information for the safety of the operator and the person in charge of maintenance.

	**The lift has been designed and built for lifting vehicles and making them stand above level in a closed area. any other use is forbidden.** **The manufacturer is not liable for possible damages to people, vehicles or objects resulting from an improper or unauthorized use of the lift.**

For operator and people safety, a square space for a safety area at least 1m free away from the lift must be vacated during lifting and lowering. The lift must be operated only from the operator's control site in this safety area.

Operator's presence under the vehicle, during working, is only admitted when the vehicle is lifted and the safety lock is engaged.

	**Never use the lift when safety devices are off-line. People, the lift and the vehicles lifted can be seriously damaged if these instructions are not followed.**

6.1 General Warnings

The operator and the person in charge of maintenance must follow accident-prevention laws and rules in force in the country where the lift is installed.

They also must carry out the following:

- Neither remove nor disconnect hydraulic, electric or other safety devices;
- Carefully follow the safety indications applied on the machine and included in the manual;
- Observe the safety area during lifting;

- Be sure the motor of the vehicle is off, the gear engaged and the parking brake put on;
- Be sure only authorized vehicles are lifted without exceeding the maximum lifting capacity;
- Verify that no one is on the arms during lifting or standing.

6.2 Safety Device

To avoid overloading and possible breaking, the following safety devices have been used:

- A pressure overload valve built inside the hydraulic power unit to prevent excessive weight.

	**The pressure overload valve has been preset by the manufacturer to a proper pressure. DO NOT try to adjust it to overrun the rated lifting capacity.**

- Mechanical safeties built in each carriage with automatic engagement for lifting safety.

	**It is strictly forbidden to modify any safety device. Always ensure the safety device for proper operation during the service.**

6.3 Safety Signs

All safety warning signs (ref. figure 7) displayed on the lift are with the purpose to draw the operator’s attention to dangerous or unsafe situations. The labels must be kept clean and they have to be replaced if detached or damaged. Read the meaning of the labels carefully and memorize it.


⚠ CAUTION
Lift to be used by trained operator only.
© 2009 by ALI, Inc.
⚠ CAUTION
Authorized personnel only in lift area.
© 2009 by ALI, Inc.
⚠ CAUTION
Use vehicle manufacturer's lift points.
© 2009 by ALI, Inc.
⚠ CAUTION
Always use safety stands when removing or installing heavy components.
© 2009 by ALI, Inc.
⚠ CAUTION
Use height extenders when necessary to ensure good contact.
© 2009 by ALI, Inc.
⚠ CAUTION
Auxiliary adapters may reduce load capacity.
© 2009 by ALI, Inc.
The messages and pictographs shown are generic in nature and are meant to generally represent hazards common to all automotive lifts regardless of specific style.
Funding for the development and validation of these labels was provided by the Automotive Lift Institute, PO Box 85 Cortland, NY 13045.
Replacement label sets may be obtained from the original lift manufacturer and ALI's member companies. They are protected by copyright.
www.autolift.org
© 2009 by ALI, Inc.
ALI/WL101c


⚠ WARNING
Clear area if vehicle is in danger of falling.
© 2009 by ALI, Inc.
⚠ WARNING
Position vehicle with center of gravity midway between adapters.
© 2009 by ALI, Inc.
⚠ WARNING
Remain clear of lift when raising or lowering vehicle.
© 2009 by ALI, Inc.
⚠ WARNING
Avoid excessive rocking of vehicle while on lift.
© 2009 by ALI, Inc.
⚠ WARNING
Do not override self-closing lift controls.
© 2009 by ALI, Inc.
⚠ WARNING
Keep feet clear of lift while lowering.
© 2009 by ALI, Inc.
The messages and pictographs shown are generic in nature and are meant to generally represent hazards common to all automotive lifts regardless of specific style.
Funding for the development and validation of these labels was provided by the Automotive Lift Institute, PO Box 85 Cortland, NY 13045.
Replacement label sets may be obtained from the original lift manufacturer and ALI's member companies. They are protected by copyright.
www.autolift.org
© 2009 by ALI, Inc.
ALI/WL101w



Figure 7 – Safety Signs

Installation

	**Only skilled technicians, appointed by the manufacturer, or by authorized dealers, must be allowed to carry out installation. Serious damage to people and to the lift can be caused if installations are made by unskilled personnel.** **Always refer to the exploded views attached during installation.**

7.1 Tool Required

Rotary Hammer Drill D.19	Hex-Key/Allen Wrench Set
Masonry Bit	Crow Bar For Shim Installation
Hammer	Chalk Line
Level	Medium Cross Screwdriver
Open-End Wrench Set	Medium Flat Screwdriver
Medium Crescent Wrench	Tape Measure

7.2 Checking For Room Suitability

The lift has been designed to be used in covered and sheltered places free of overhead obstructions.

The place of installation must not be next to washing areas, painting workbenches, solvent or varnish deposits. The installation near to rooms, where a dangerous situation of explosion can occur, is strictly forbidden. The relevant standards of the local Health and Safety at Work regulations, for instance, with respect to minimum distance to wall or other equipment, escapes and the like, must be observed.

7.3 Lighting

Lighting must be carried out according to the effective regulations of the place of installation. All areas next to the lift must be well and uniformly lit.

7.4 Floor Requirement

The lift MUST be installed on 3000 PSI concrete with the minimum thickness 6 1/3” and a minimum edge distance of 5’’ from anchoring points. New concrete must be adequately cured by at least 21 days minimum.

	**Specifications of concrete must be adhered to. Failure to do so could cause lift failure resulting in personal injury or death.**

	**A level floor is suggested for proper installation. Small differences in floor slope may be compensated for by proper shimming. Any major slope change will affect the level lifting performance. If a floor is of questionable slope considering to pour the new concrete slab.**

7.5 Site Layout

- Now locate the lift according to the floor plan the figure 8, use a carpenters chalk line to layout a grid for the column locations
- After the column locations are properly marked, use a chalk or crayon to make an outline of the columns on the floor at each location using the column base plates as a template.
- Double check all dimensions and make sure that the bases of each column are square and aligned with the chalk line

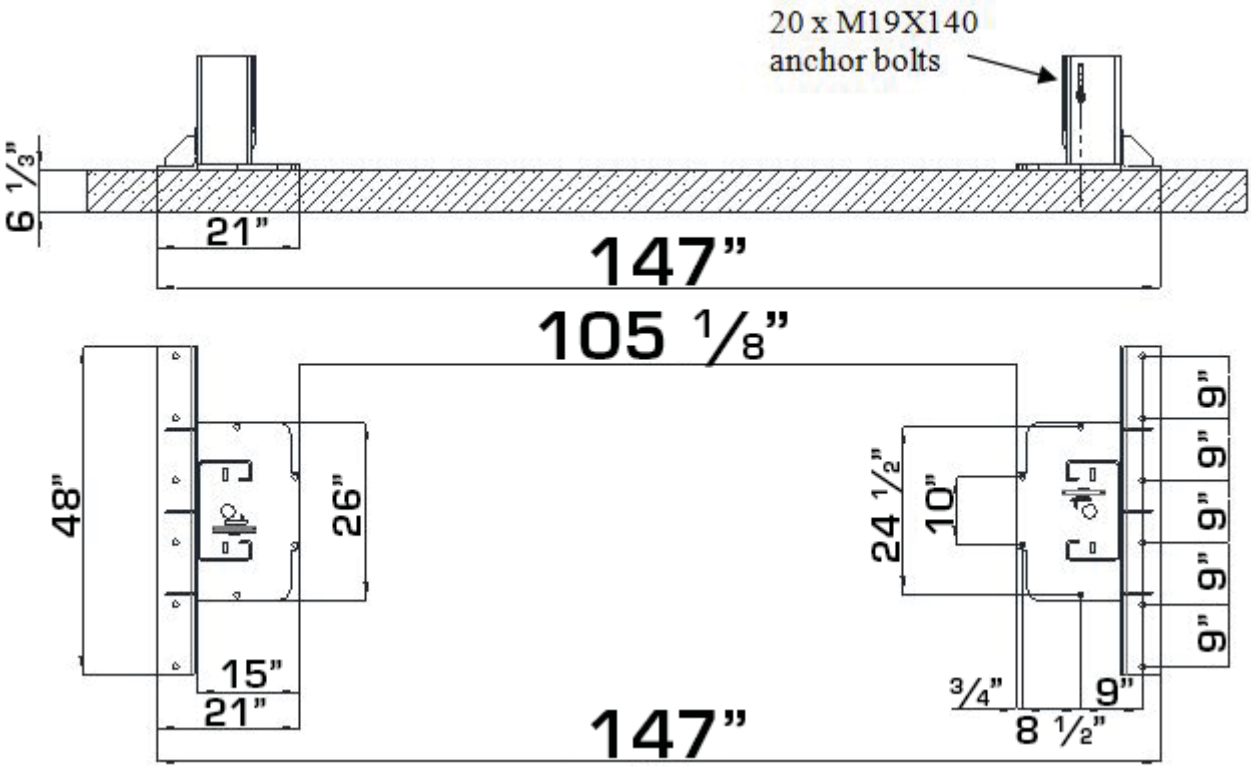

Figure 8 – Floor Plan

7.6 Anchoring Power-Side Column

⚠	**The requirements for column's square-ness and plumb must be adhered to. Failure to do so could cause lift failure resulting in personal injury or death.**

☞	**Do not drill anchor holes of off-side column and anchor it in this procedure.** **Make sure to use caution to prevent off-side column from falling over before it is anchored.**

- Use the base plate on the power-side column as the guide, drill each hole in the concrete approximately 6" deep with the rotary hammer drill D.19. To assure full holding power, do not ream the hole or allow drill to wobble;
- After drilling, remove dust thoroughly from each hole using compressed air and/or wire brush. Make certain that the column remains aligned with the chalk line during this process;

- Assemble the washers and nuts on the anchors then tap into each hole with a hammer until the washer rests against the base plate. Be sure that if shimming is required that enough threads are left exposed;
- If shimming is required, insert the shims as necessary under the base plate so that when the anchor bolts are tightened, the column will be plumb;
- With the shims and anchor bolts in place, tighten by securing the nut to the base. DO NOT use an impact wrench for this procedure.
- If anchors do not tighten to 150 ft-lbs. installation torque, replace the concrete under each column base with a 4’ x 4’ x 6” thick 3000 PSI minimum concrete pad keyed under and flush with the top of existing floor. Allow concrete to cure before installing lifts and anchors (typically 2 to 3 weeks).
- Anchor another column as outlined in above steps.

7.7 Installation Of (Optional) Extension And Cylinder

- Disengage the latch by pulling out the lock release rod (9/fig.2);
- Slide the carriage to the column baseplate, then engage the latch by pushing the lock release rod in;
- Slide the carriage up until the first “click” is heard;
- Align the holes between the column and the extension with screws and the washers as shown in the figure 9A;
- Tighten the screws and nuts thoroughly;
- Install the cylinder as shown in the figure 9A.

If the higher extensions are ordered, install referring to the figure 9B.

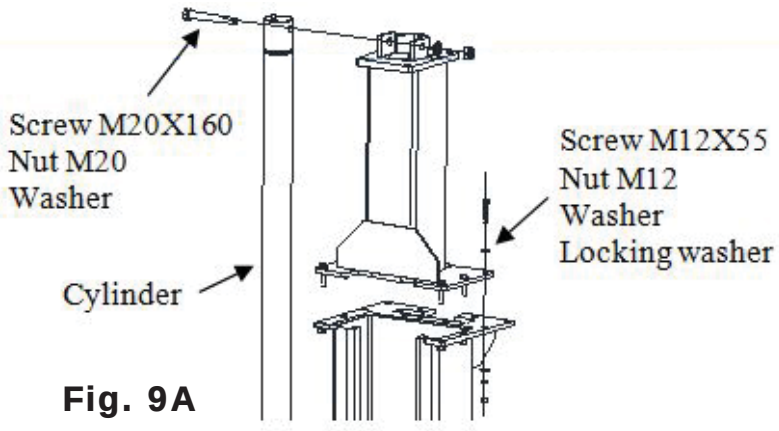

Fig. 9A

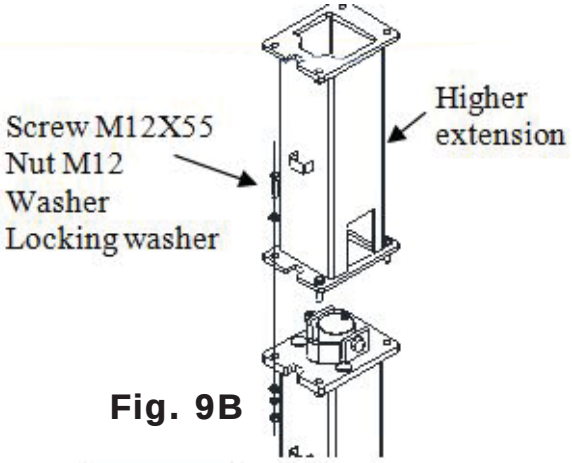

Fig. 9B

7.8 Installation Of Overhead Beam (Ref. Fig. 10)

- Install the anti-crushing bar brackets on the beam using M6X12 screws and nuts. Make sure to position the overhead switch bracket adjacent the power-side column;
- Place the anti-crushing bar on the overhead switch bracket and fix it on another bracket using M8X40 screw and nuts;
- Slide the overhead switch into the anti-crushing bar and fix it using M8X55 screws and nuts. Make sure the switch cable goes through hose guides / retainers on the columns;
- Use a lifting device to raise the assembled beam and install it to the column extensions as shown.
- Align the holes between the column and the extension with screws and the washers as shown;
- Tighten all screws and nuts for connection of the overhead beam properly.

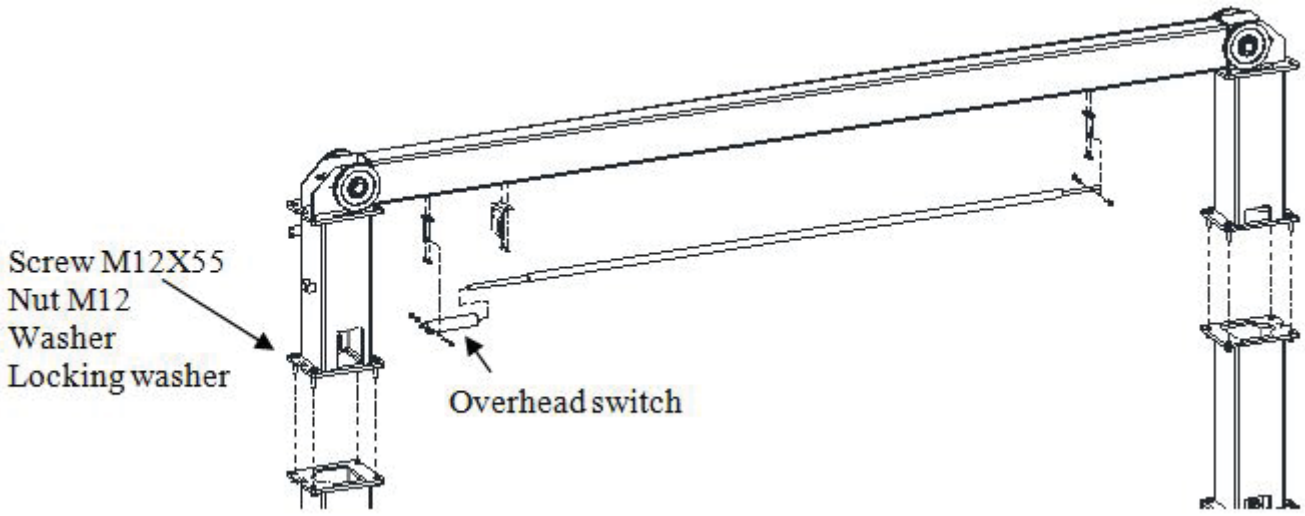

Figure 10 – Installation Of Overhead Beam

7.9 Anchoring Off-Side Column

- The real layout of the base of the off-side column may vary slightly from the preliminary layout. Make sure that the off-side column perpendicular and parallel to the power-side column;
- Drill holes and anchor the off-side column referring to the procedure described in the chapter 7.6 for anchoring the power-side column.

7.10 Routing Equalizer Cables (Ref. Fig. 11)

- Use an appropriate lifting equipment to raise the carriage to the first latch position. Be sure the carriage is engaged securely before attempting to route the equalizer cables. Carriages must be equal height from the floor before proceeding;
- With the carriages in equal height, route the equalizer cables as shown. Make sure the cables in the place on the pulleys. Make sure the cables routed properly;
- After the equalizer cables have been routed, adjust the nut to make each cable in equal tension using the special wrench supplied.

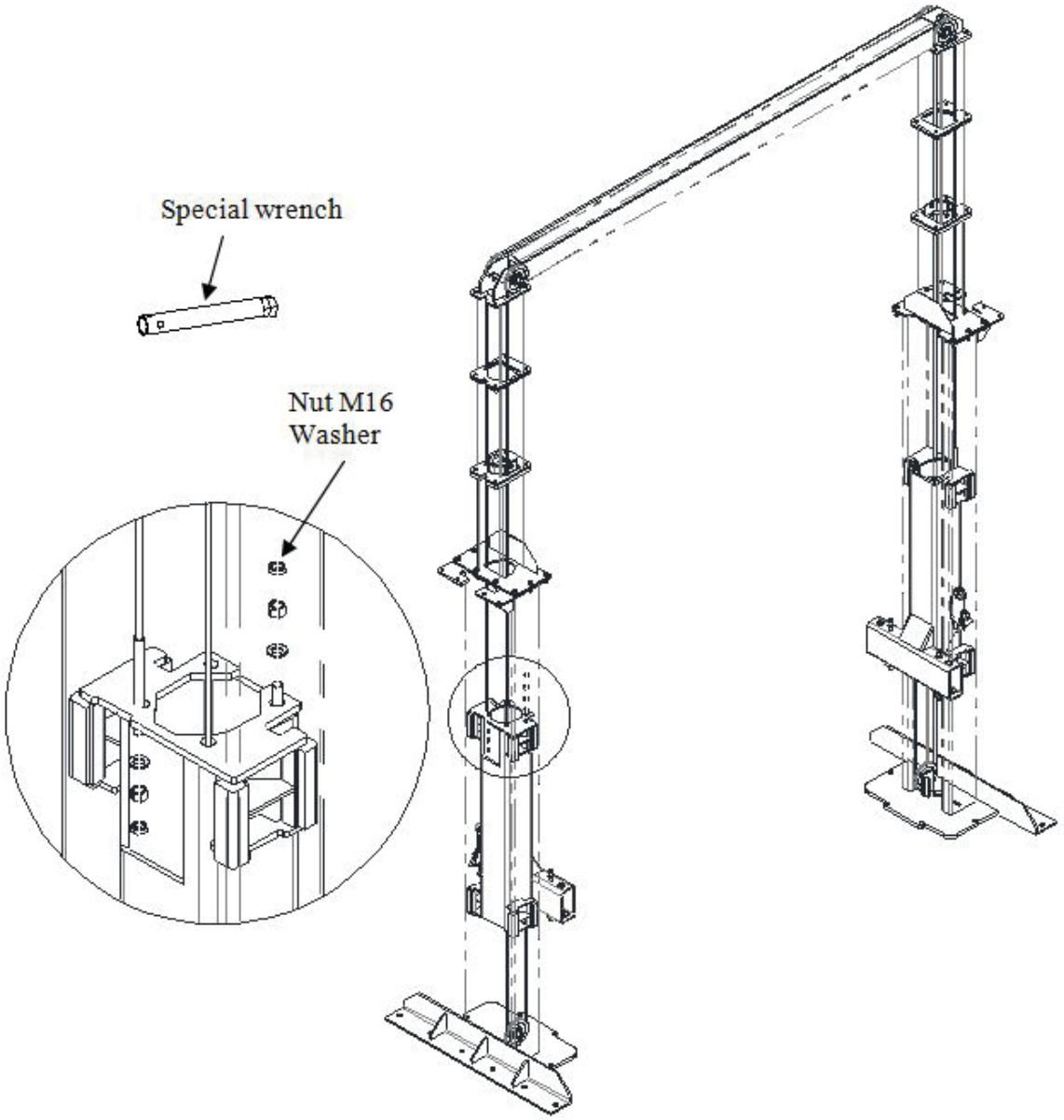

Figure 11 – Routing Equalizer Cable

7.11 Installation Of Power Unit (Ref. Fig. 12)

- Attach the power unit onto the bracket on the power side column;
- Secure it using M8X30 screws, M8 nuts and the washers;
- Make sure to keep the power unit clean.

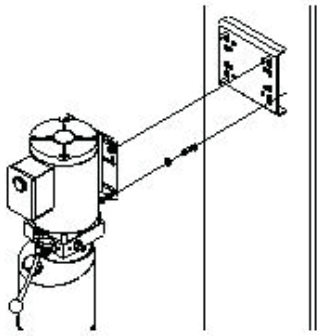

Fig. 12

7.12 Connection Of Hydraulic Hoses

⚠	**When routing the hydraulic hose, make sure that the hose is clear of any moving part. Make sure to keep the hoses clean from dust.** **Make sure not to over-tighten the hose fittings so as to result in oil leakage.**

- Clean the hoses and fittings;
- Inspect all threads for damage and make sure that all hose fittings are in good condition;
- Route the hoses as shown. Make sure the hose goes through hose guides / retainers on the columns and in center of overhead beam;
- Tighten the hose fittings thoroughly.

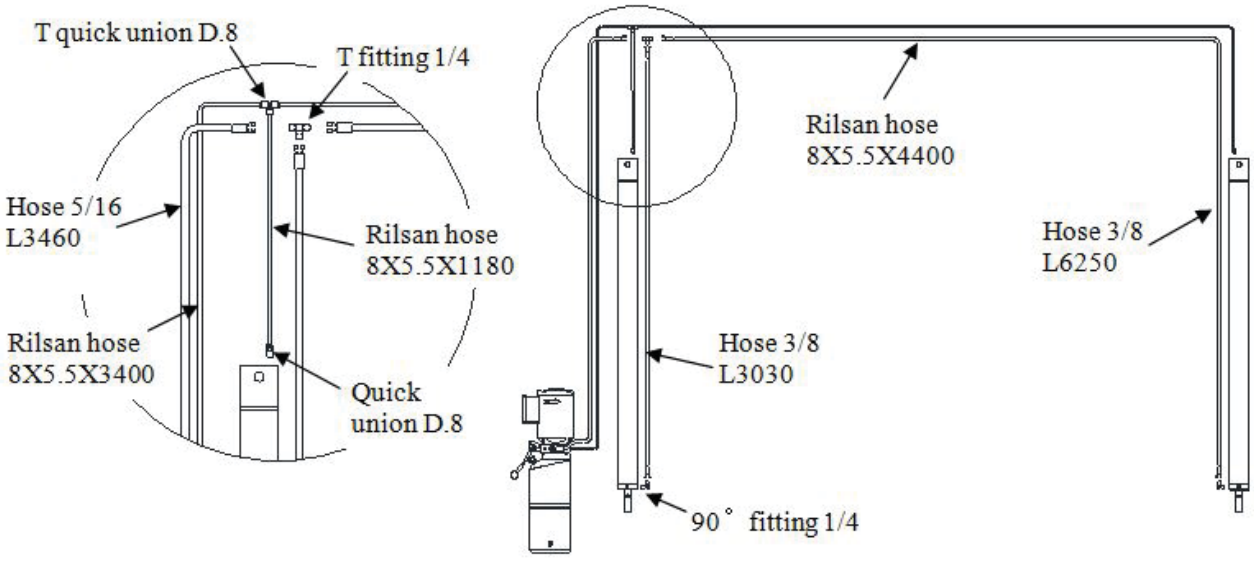

Figure 13 – Hydraulic Line Connection

7.13 Make The Electrical Connection

	**The hookup work must be carried out by a qualified electrician.** **Make sure that the power supply is right.** **Make sure the connection of the phases is right. Improper electrical hook-up can damage motor and will not be covered under warranty.** **Make sure the lift is ground well.** **The power unit must be kept dry.**

	**It is strictly forbidden to use 60Hz motor on 50Hz power supply.**

- Make the electric hookup to the hydraulic power unit referring to the wiring diagram (fig. 6);
- Make sure to install a proper circuit breaker on the circuit (DZ47-63/ D32A/2P is suggested for single phase 208-240V);
- When routing the electric cable for the overhead switch, make sure to keep it clear of any moving parts and go through hose guides / retainers on the power-side column and in center of overhead beam;
- Make sure the lift is grounded well.

7.14 Oil Filling And Bleeding

	**DO NOT run power unit with no oil. Damage to pump can occur.** **If motor gets hot or sounds peculiar, stop immediately and recheck the electric connection.**

- Use the hydraulic fluid recommended in the chapter 5.5;
- Remove the vented cap on the oil tank and pour oil in the tank about 15 liters;
- Cycle the lift up and down several times to insure latches click together and all air is removed from the system;
- To lower the lift, raise the lift to clear the latches at first then release the latches manually;

- If latches click out of synchronization, tighten the cable on the one that clicks first;
- Fill the more fluid if necessary till the tank is full.

7.15 Installation Of Arms (Ref. Fig. 14)

- Raise the carriages to a convenient height;
- Install the swing arms on the carriages using the included pins as shown;
- Install the gears on arms using M10X35 screws. Pay attention to the beveled gear orientation;
- Check for proper engagement of the arm lock – the teeth on the lock should fully engage the gear on the arm. If arm pins are not fitting, pull up on arm lock to allow slack for the arm to move around in the carriage, allowing the arm pin to fit easier.

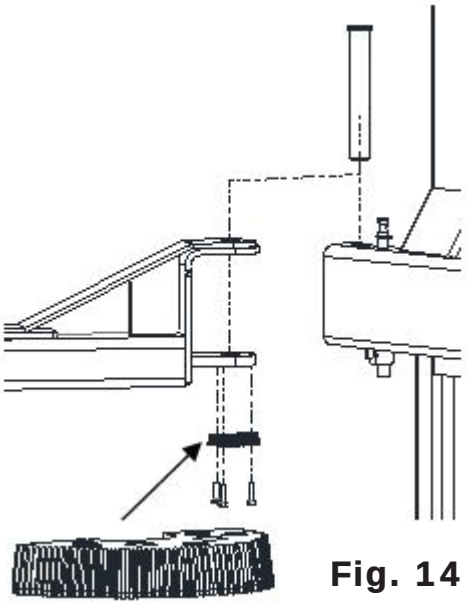

Fig. 14

7.16 Check Before Start-Up

7.16.1 General Checks

- Make sure that the columns are plumb;
- Make sure the lift anchored to the ground and all anchor bolts tightened.
- Make sure the electrical system feeding voltage is equal to that specified in the nameplate on the motor;
- Make sure the electric system connection in conformity of the electric plan shown as the electric diagram (fig. 6) and for proper grounding.
- Particularly, below checks must be followed:

7.16.2 Mechanical Safeties For Proper Installation

- Check to make sure that safety latches will properly engage and disengage by manual release;
- If latches click out of synchronization, tighten the cable on the one that clicks first.

7.16.3 Equalizer Cable For Proper Installation

	The equalizer cables should be checked weekly for equal tension. Failure to do this will cause uneven lifting. The cables should always be adjusted so that they are equal tension when resting on the safety locks.

- Raise the carriages to check the equalizer cable tension by grasping the adjacent cables between the thumb and the forefinger so that you can just pull the cables together (ref. fig. 15);
- Adjust the cable tensions if necessary.

Fig. 15

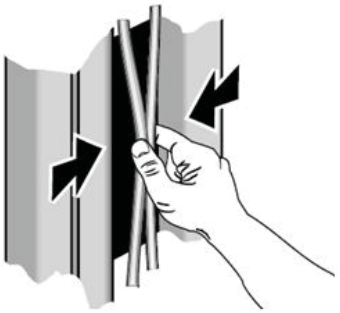

7.16.4 Hydraulic System For Proper Operation

- Make sure that the cylinder is located in the center hole in the base of column;
- Proper oil level in the tank, refill if needed;
- Raise the lift to the full height and keep the motor running for 5 seconds and check all hoses connections to make sure no leakage. Tighten the connections or reseal if necessary;
- Check the lift for reaching its maximum height;
- Repeat the air bleeding of cylinders if necessary.

7.16.5 Overhead Switch For Proper Operation

- Check the overhead switch. Verify that it cuts of electrical supply when the crush proof bar is raised.
- If the overhead switch does not interrupt the electrical supply, check wiring to the A/C contactor.

7.17 Check With Load

	WARNING: please follow carefully the instructions in the coming paragraph for avoiding damages on the lift.

Carried out two or three complete cycles of lowering with the vehicle loaded:

- Repeat the checks provided for by 7.16.
- Check no strange noise during lifting and lowering

Operation And Use

	NEVER operate the lift with any person or equipment below. **NEVER exceed the rate lifting capacity.** **NEVER lift a vehicle in any manner with less than four arms.** **Always ensure that the mechanical locks are engaged before any attempt is made to work on or near the vehicle.** **Always lift a vehicle on the lifting pads.** **NEVER leave the lift in an elevated position unless the safeties are engaged.** **If an anchor bolt becomes loose or any component of the lift is found to be defective, DO NOT USE THE LIFT until repairs are made.**

8.1 Controls

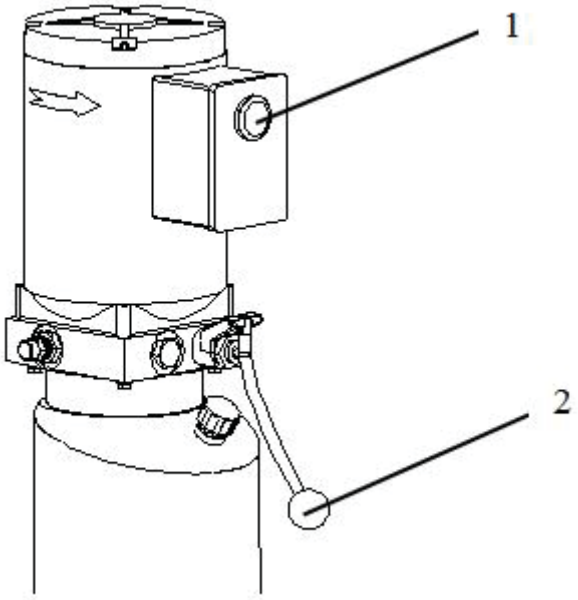

Figure 16 - Controls

Controls for operating the lift are:

LIFTING BUTTON (1)

- When pressed, the power unit is running and the lift can be raised to a desired height until the button is released.

LOWERING LEVER (2)

- If the mechanical locks are not released, the lift will lower to the nearest lock position.
- If both mechanical locks are released, press the lower lever, the lift will lower to the desired height under its weight and the load lifted until the lever is released.

Lift operation can be summarized into four steps:

8.2 Vehicle positioning

- Positioning the vehicle between columns;
- Adjust lift arms so that the vehicle is positioned with the centre gravity between the pads. Make sure the arm safeties are engaged;
- Raise the lift by pressing the lifting button until the lifting adaptors contact underside of the vehicle;
- Make sure the vehicle is secured.

8.3 Lifting

- Raise the lift by pushing the lifting button until reaching the desire height.

8.4 Standing

- Press the lowering lever to engage the nearest lock position;
- Always ensure that the lock in each column is engaged before any attempt is made to work on or near the vehicle.

8.5 Lowering

- Raise the lift a little bit by pushing the lifting button to clear off the mechanical locks;
- Release the locks manually;
- Lower the lift by pressing the lowering lever;
- Before removing vehicle from the lift area, position the lift arms to and pads to provide an obstructed exit;
- Never drive over the lift arms.



NEVER LIFT ANY VEHICLE IN ANY MANNER WITH LESS THAN FOUR (4) ARMS. RATED CAPACITY OF EACH LIFT ARM IS NO GREATER THAN ONE FOURTH (1/4) OF THE OVERALL LIFTING CAPACITY.

Maintenance

	**Only trained people who know how the lift works, can be allowed to service the lift**.

To service properly the lift, the following has to be carried out:

- use only genuine spare parts as well as equipment suitable for the work required;
- follow the scheduled maintenance and check periods shown in the manual;
- discover the reason for possible failures such as too much noise, overheating, oil blow-by, etc.
- refer to documents supplied by the manufacture or dealer to carry out maintenance.

	**Before carrying out any maintenance or repair on the lift, disconnect the power supply.**

9.1 Ordinary Maintenance

The lift has to be properly cleaned at least once a month using self-cleaning clothes.

	**The use of water or inflammable liquid is strictly forbidden**

Be sure the rod of the hydraulic cylinders is always clean and not damaged since this may result in leakage from seals and, as a consequence, in possible malfunctions.

9.2 Periodic Maintenance

Daily pre-operation

- Check hydraulic connections and hoses for leaks
- Check mechanical locks audibly and visually while in operation
- Check arm locks
- Check bolts, nuts and screws are tight

Every 1 month

- Check all cable connections, pins and bolts to insure proper mounting
- Inspect all anchor bolts and retighten if necessary
- Check columns for square-ness and plumb
- Check equalizer cable tension, adjust if necessary
- Check safety cable, adjust it if necessary
- Check all arm pivot pins. Make sure they are properly secured
- Check all lifting pads, replace if necessary
- Lubricant columns with grease
- Check the hydraulic oil, fill or replace if necessary
- Check hydraulic systems for proper operation

Every 12 months

- Verify that all components and mechanisms are not damaged
- Verify the equalizer cables are not worn, change if necessary
- Check the electrical system to verify that the motors operate properly (this work must be carried out by skilled electricians)
- empty the oil tank and change the hydraulic oil

Troubleshooting

A list of possible troubles and solutions is given below

Trouble:	Possible Cause:	Solution:
The lift does not work	There is no power	Check Power on to restore if necessary
	The electrical wires are disconnected	Reconnect
	The circuit breaker are blown	Check for correct voltage
		Replace
The lift does not raise	The lift is overloaded	Check the vehicle weight
	The motor direction of rotation is not correct.	Interchange the two phases on the main switch
	The oil in the power unit is not sufficient.	Add some hydraulic oil
	The UP button is faulty.	Check UP button and connection for proper operation. Replace if needed
	The lowering valve does not close.	Check and clean, if dirty or replace if faulty
	The suction tube or pump filter is dirty.	Check and clean if needed.
	Presence of air in the hydraulic system	Bleed the hydraulic system
The lifting capacity is not sufficient	The pump is faulty	Check the pump and replace if needed.
	Oil leakages in hydraulic circuit	Check the circuit for any leakage
The lift does not lower when the lowering lever and the safety release lever are pressed	The lowering valve does not work properly	Check the valve and replace if needed.
	The equalizer cables are not in the same tension.	Readjust the equalizer cables.
The lift does not lower smoothly	Presence of air in the hydraulic system	Bleed the hydraulic system
	Lubrication of sliders is not enough.	Grease
	Sliders are damaged	Replace

Additional Information

Final Check of Assembled Lift

	Final dimension check after anchoring.
	Base and columns properly shimmed and stable.
	Anchor bolts tightened.
	Runways properly attached, secured, and level.
	Check for hydraulic leaks.
	Ensure cables are properly routed and free from obstructions.
	Check jam nuts on cables are tightened.
	Check oil level and look for leaks.
	Check adjustment of safety release cable to ensure both sides are working properly.
	Re-check level of towers.
	Check torque of anchor bolts.
	Check all fasteners, tighten if necessary.
	Electric power supply confirmed.
	Check for overhead obstructions.
	Check shut off at top of stroke to ensure lift shuts off.
	Check proper operation of arm restraints.
	Operate lift to full stroke then lower to ground while checking for proper functionality.
	Check proper operation of arm restraints.
	Operation and Safety Manual at site.
	Ensure all documents listed below are given to the owner.
	ANSI / ALI Lift It Right Manual
	ANSI / ALI Safety Tip Card
	ANSI / ALI ALIS Safety Requirements for Installation
	ALI/LP Lifting Points Quick Reference Guide
	Train end user on operation of lift.

Vehicle Lifting Points

Some vehicles may have the manufacturer's Service Garage Lift Point locations identified by triangle shape marks on its undercarriage (reference SAE J2184). Also, there may be a label located on the right front door lock face showing specific vehicle lift points. If the specific vehicle lift points are not identified, refer to the "Typical Lift Points" figure below or the ALI/LP Guide - Vehicle Lifting Points/ Quick Reference Guide included with your lift. Consider center of gravity, contents of vehicle and weight shifting before operating.

Make sure vehicle is neither front nor rear heavy. If the specific vehicle lift points are not identified, or if the vehicle has additional or uniquely positioned payload, have a qualified person calculate the vehicle center of gravity or have the vehicle center of gravity determined at a vehicle scale. Load the vehicle with the center of gravity midway between adapters.

Unusual vehicles, such as limousines, RV's, and long wheelbase vehicles, may not be suitable for lifting on this equipment. If necessary, consult with your Atlas Automotive Equipment representative or contact the vehicle manufacturer.

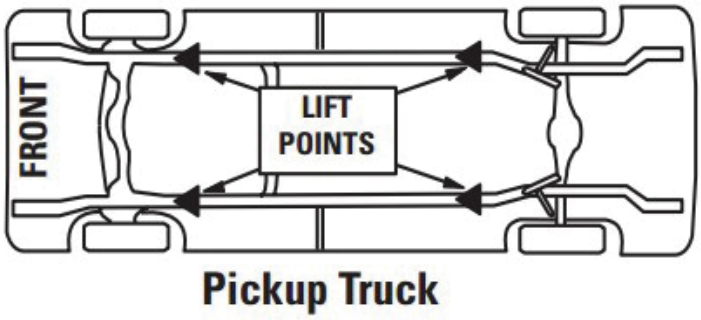

Pickup Truck

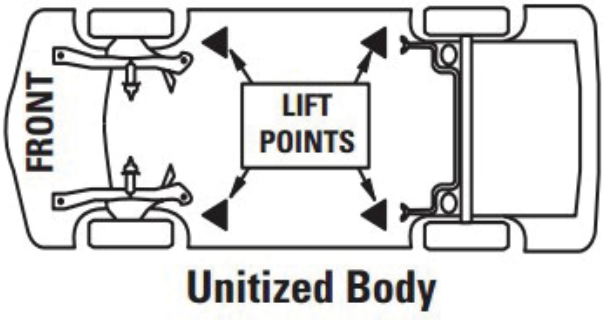

Unitized Body

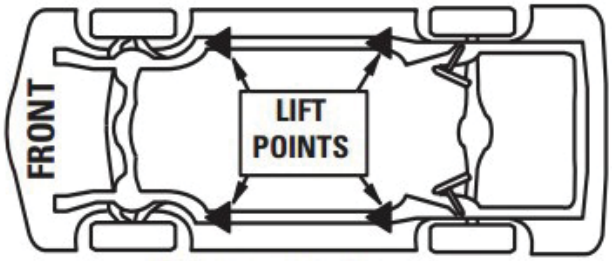

Perimeter Frame

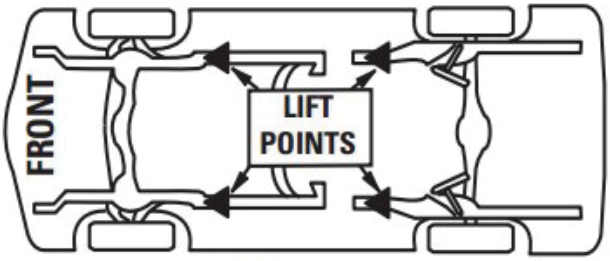

Stub Frame

Operation Test with Vehicle

Prior to starting this section, please refer to the important safety instructions at the beginning of this manual. Reference Automotive Lift-Safety Requirements for Operation, Inspection, and Maintenance (ANSI/ALI ALOIM)

After finishing the above assembly instructions and adjustments, perform an operation test of the lift using a typical vehicle.

1. Lower lift to ground.
2. Drive vehicle on to lift and position the arms as per the “Lift it Right” manual and “Lifting Points Quick Reference” guide.
3. Raise lift to and lower onto 3-4 lock positions during full rise to ensure all locks are working correctly.
4. Re-adjust cables if necessary while vehicle is on.
5. Check lowering speed and smooth decent rate.
6. Lower lift to ground and drive vehicle off lift.

Run the lift in the low position several times, and then run the lift to the top completely.

If any problems occur during the final checkout or operation test of the lift with a vehicle, please contact your lift distributor, sales representative or manufacturer immediately.

Operating Instructions

Please reference enclosed ANSI/*ALI ALOIM – Current Edition* and *ALI/LP Guide* before proceeding.

1. Ensure lift is fully lowered and service bay is clear.
2. Move swing arms to full drive thru position.
3. Center the vehicle between the lift posts and position the arms in accordance with the supplied “Lifting it Right” and “Lifting Point” guides. Be sure you are using the proper adapters.
4. Push the raise switch on the power unit and ensure that the arm restraint pins for engagement.
5. Raise the vehicle until the suspension and tires clear the floor.
6. Stop and check the adapters for secure contact in accordance with the vehicle manufacturer recommended lifting points and “Lifting Point” guide.
7. Moderately shake vehicle by pushing on the front or rear bumper to ensure that vehicle is safely positioned on the lift.
8. After confirmation that vehicle is securely positioned, continue to raise the lift to the desired lift height.
9. Lower the lift onto the mechanical locking latches.
10. Avoid excessive rocking of the vehicle while it on the lift.
11. Always use safety support stands when removing or installing heavy vehicle components.
12. To lower the lift, first be sure that all objects and all personnel are free from lift area. Observe pinch point and other warning decals.
13. Raise the lift off the locking latches.
14. Pull down and hold the safety release while pressing the hydraulic lowering valve handle until the lift has fully lowered to the ground and the arm restraints have disengaged.
15. Remove adapters and position arms in full drive thru position before removing vehicle from the service bay.

Inspection and Maintenance

Please refer to the ANSI/ALI ALOIM – Current Edition “AMERICAN NATIONAL STANDARD for Automotive Lifts – Safety Requirements for Operation, Inspection and Maintenance”.

Periodic inspections and maintenance shall be performed only by trained lift service personnel. Never operate a lift that is damaged or in disrepair. Proper inspection and maintenance is necessary for the safe operation of the lift. Contact a local service or factory representative immediately if any issues arise or if you are not completely familiar with automotive lift maintenance procedures.

Daily Procedures

- Check to ensure bolts are tightened
- Check lift components and keep clean and free of debris
- Check for oil leakage
- Check all electrical components and wiring
- Check cables and sheaves
- Check all hydraulic lines and fittings
- ***Repair or replace all damaged, defective, worn, frayed or broken components immediately. Only use parts approved by the original equipment manufacturer or parts meeting original manufacturer specifications.***

Monthly Procedures

- Check equalizer cable tension and adjust accordingly
- Check lubrication points and lubricate accordingly
- Check anchor bolts for tightness and appropriate torque
- Check fluid levels
- ***Repair or replace all damaged, defective, worn, frayed or broken components immediately. Only use parts approved by the original equipment manufacturer or parts meeting original manufacturer specifications.***

Lockout and Tagout Procedures

Please refer to ANSI Z244.1

Purpose: This procedure establishes the minimum requirements for lockout of energy sources that could cause injury to personnel by the operation of the lift. . All employees and/or operators shall comply with the procedure.

Responsibility: The responsibility for seeing that this procedure is followed is binding upon all owners, employees and lift operators. All owners, employees and operators shall be instructed in the safety significance of the lockout procedure by the owner, supervisor or appropriate personnel. Each new or transferred affected employee or operator shall be instructed by appropriate personnel in the purpose and use of the lockout procedure.

Preparation for Lockout: Employees authorized to perform lockout shall be certain as to which switch, valve, or other energy isolating devices applies to the lift. More than one energy source (electrical, mechanical, or others) may be involved. Any questionable identification of sources shall be cleared by the employees, their supervisors, or appropriate personnel. Assure that job authorization has been obtained before lockout commences.

Sequence of Lockout Procedure

- Notify all affected employees and operators that a lockout is required and the reason therefore.
- If the lift is operating, shut it down by the normal stopping procedure (such as assuring the disconnect switch is off)
- Operate the switch, valve, or other energy isolating devices so that the energy source(s) (electrical, mechanical, hydraulic, and other) are disconnected or isolated from the lift.
- If it is a lockable device, lockout with an assigned individual lock. If it is not a lockable device, replace with a dummy device and tag accordingly. If more than one individual is required to lock out the lift, each shall place their own personal lock on the energy isolating device(s).
- Adequately label or tag the lift stating not to operate or tamper with the tag or label
- Stored energy (such as that in capacitors and hydraulic systems) must also be addressed
- After ensuring that no personnel are exposed and as a check to ensure the lockout is working, operate the push button or other normal operating controls to make certain the lift will not operate. Return the lift operating controls to neutral position after the test.
- The equipment is now locked out.

Restoring Equipment to Service

- When the job is complete and equipment is ready for testing or normal service, check the lift area to see that no one is exposed.
- When lift is clear, remove all locks. The energy isolating devices may be operated to restore energy to lift.

Rules for Using Lockout Procedure: The lift shall be locked out to protect against accidental or inadvertent operation when such operation could cause injury to personnel. Never attempt to operate any switch, valve, or other energy isolating device bearing a lock.

Wire Ropes



WARNING

- Wire ropes are critical to the safe and reliable performance of your lift.
- Cables are expendable items and should be replaced as a set.

Cable Condition Guide

Maximum Allowable Cable Necking

Nom. Cable Diameters Max. Reduction in Diameter	
Up to 5/16”	1/64”
3/8” to 1/2”	1/32”
9/16” to 3/4”	3/64”
7/8” to 1-1/8”	1/16”
1-1/4” to 1-1/2”	3/32”

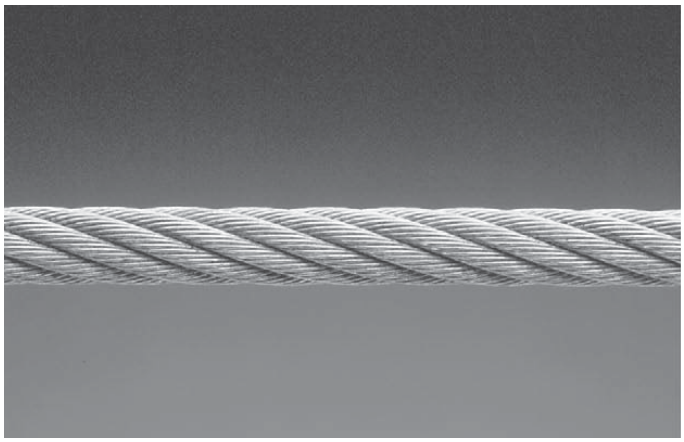

Typical Good Cable

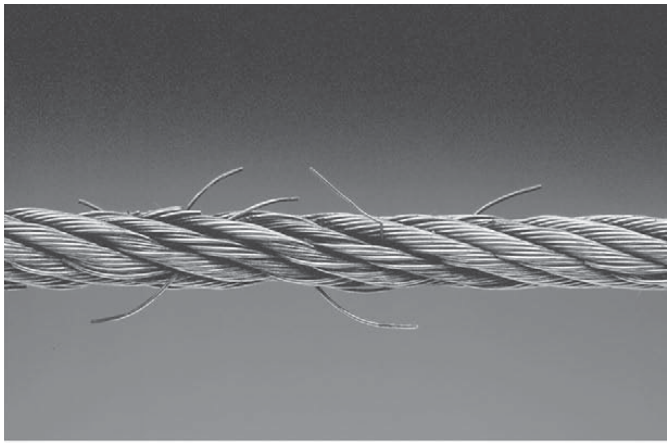

Cable with Broken Wires

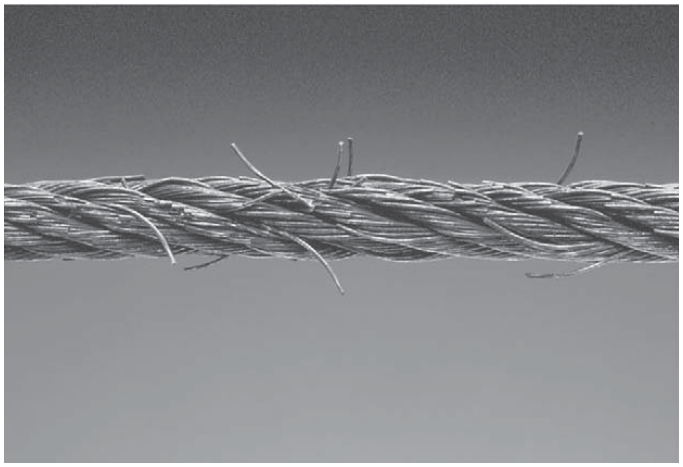

Cable with Severe Corrosion

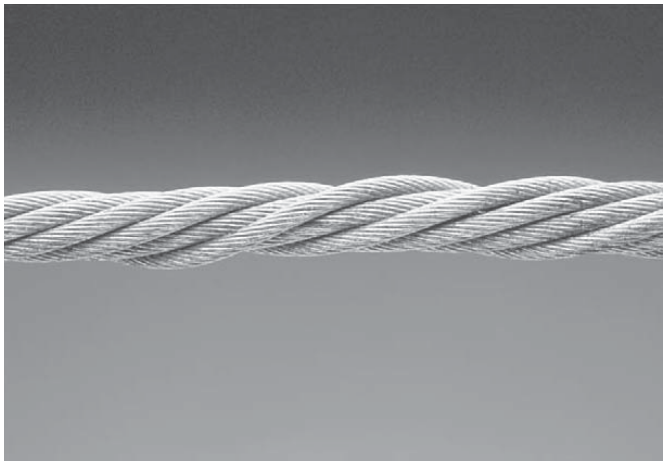

Cable with Necking

Wire Rope Replacement Criteria

WARNING

If any cable is found to be in need of replacement, the entire cable set, pulleys and safety rollers, must be replaced immediately.
See *Cable Condition Guide.*

The Wire Rope MUST be Replaced if One or More of the Following Criteria Are Met:

- More than six (6) randomly distributed broken wires in one rope lay or 6xd length.
- More than three (3) broken wires in one strand in one rope lay or 6xd length.

- Three (3) or more broken wires at rope terminations.
- One outer wire broken at the point or contact with the core of the rope whish has worked its way out of the rope structure and protrudes or loops out from the rope structure.
- Heavy rusting, corrosion, or pitting. A light surface corrosion on outer wires is normal.
- Wear or scraping of one-third (1/3) of the original diameter of outside individual wires.
- Excessive stretch. It is normal for new cable to require adjustment during “break-in,” after which small periodic adjustments may be required. However, if a cable that has been in service for 6 months should suddenly require frequent adjustments or has used all the cable adjustments available, all cables must be replaced immediately.
- Deformed strands, kinking, crushing, bird-caging, or any other damage or distortion of wire rope structure.
- Variations in diameter (necking) or any change from normal appearance.
- Reductions from nominal diameter of more than 1/32” (for cables 3/8” to 1/2” diameter inclusive.)
- End attachments cracked, deformed or worn.

** Lay is the distance measured, parallel to the rope axis, in which a single strand makes one complete turn around the rope axis, or the wires make a complete turn around the axis of the strand.*

Please reference ANSI/ALI ALOIM standard for more information on wire rope cable inspection.

EMERGENCY OPERATION IF LIFT BECOMES INOPERABLE IN RAISED POSITION

If the lift becomes inoperable in the raised position, wait until electrical power is restored to the lift before attempting to lower the vehicle. If it is crucial for reasons of safety that the vehicle be lowered, please **DO NOT** attempt to do so on your own without first contacting your local authorized service representative or distributor, who can verbally walk you through the process or assist, in person, where necessary.



WARNING: DO NOT LOOSEN OR REMOVE HYDRAULIC CONNECTIONS OR FITTINGS UNDER PRESSURE. SERIOUS INJURY OR DEATH COULD OCCUR.

Part List

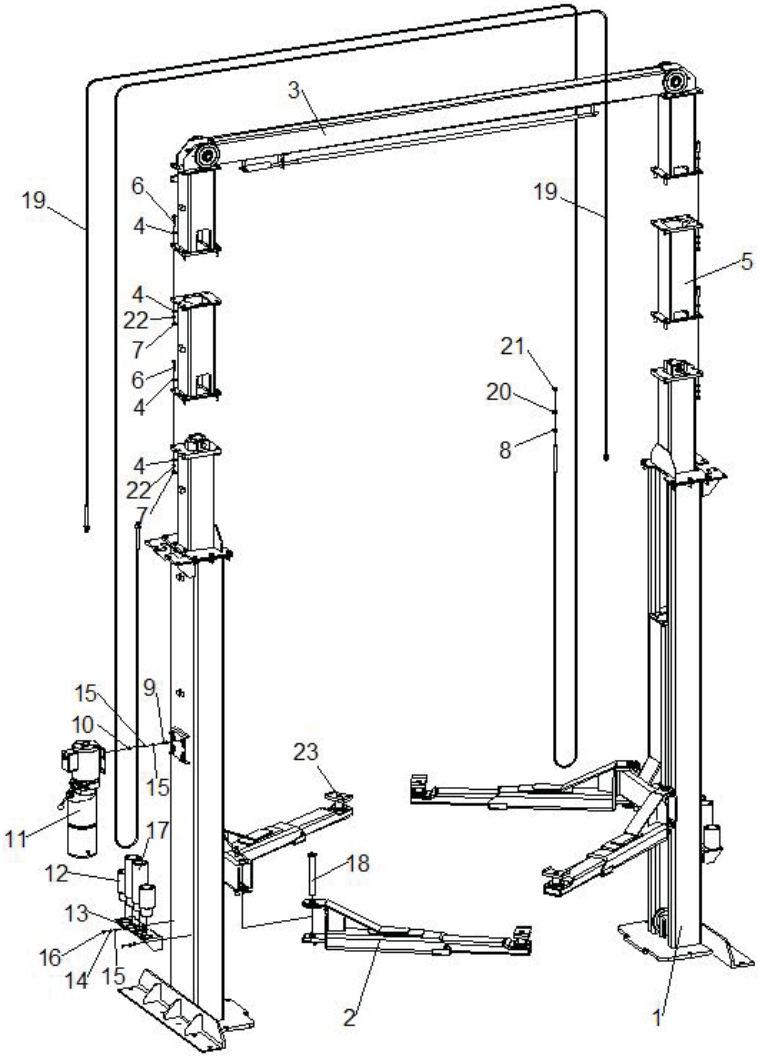

Figure 17 – General Part List

Item	Part number	Description	Qty	Item	Part number	Description	Qty
1	Z22A101000	Column assembly	2	13	Z22A500102	Extension holder	2
2	Z22A310000	Arms assembly	4	14	0208006	Locking washer D.8	4
3	Z22A410000	Overhead beam	1	15	0205008	Washer D.8	12
4	0205013	Washer D.12	32	16	0201025	Screw M8X16	4
5	Z22A601100	Column extension 2	2	17	Z22A600102	Pad extension H.254	4
6	0201121	Screw M12X55	16	18	Z22A530100	Arm shaft	4
7	0203013	Nut M12	16	19	Z22A520100	Equalizer steel cable	2
8	0205020	Washer D.16	4	20	0203025	Nut M16	4
9	0201031	Screw M8X30	4	21	0204032	Jam nut M16	4
10	0203029	Nut M8	4	22	0208009	Locking washer D.12	16
11	0302008	Hydraulic power unit	1	23	Z22A313000	Adaptor assembly	4
12	Z22A600101	Pad extension H.127	4				

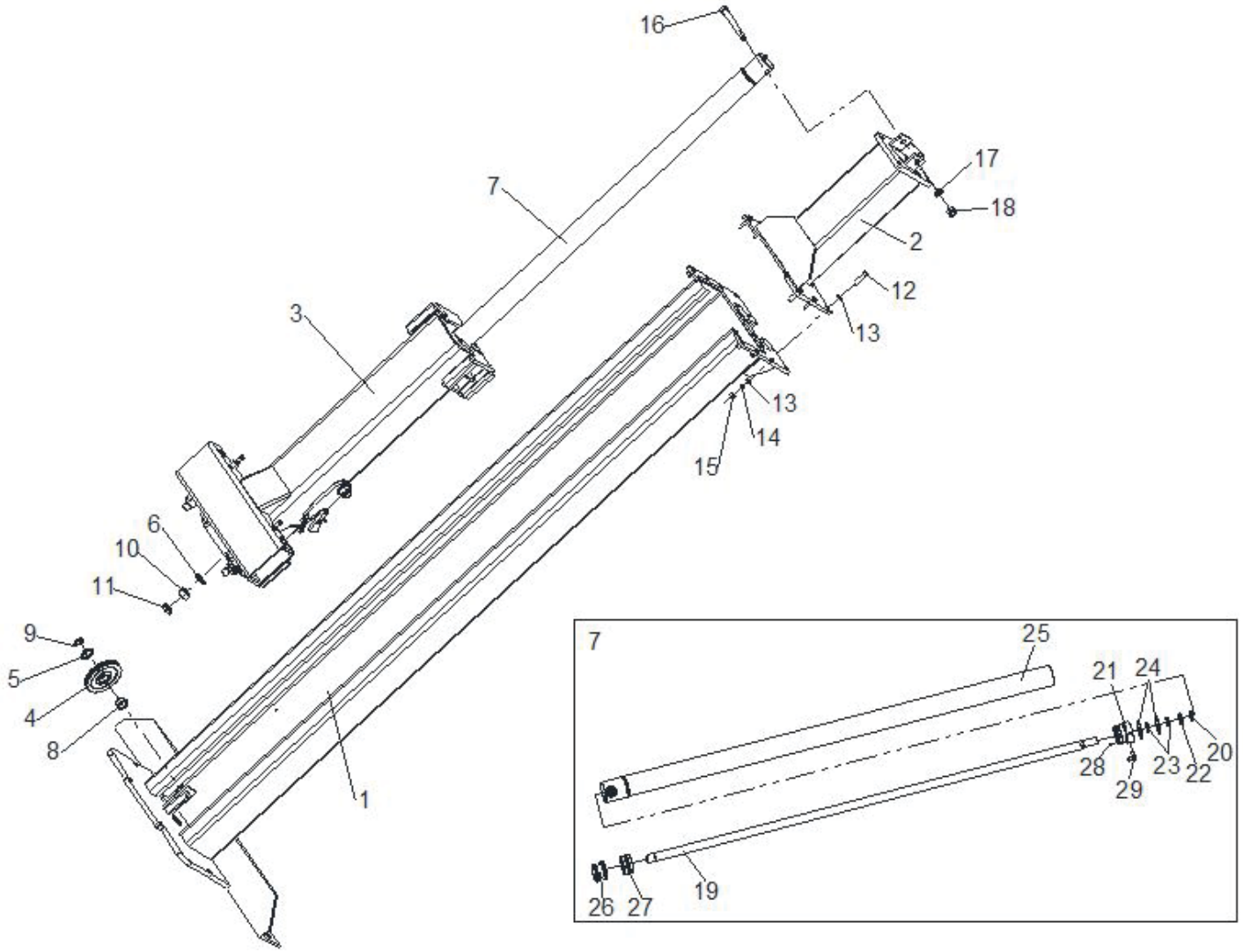

Figure 18 – Column Assembly

Item	Part number	Description	Qty	Item	Part number	Description	Qty
1	Z22A111000	Column weldment	1	16	0201017	Screw M20X160	1
2	Z22A121000	Column extension 1	1	17	0205023	Washer D.24	1
3	Z22A201000	Carriage assembly	1	18	0204027	Self-locking nut M20	1
4	Z22A110001	Cable pulley	1	19	Z22AY75002	Cylinder shaft	1
5	Z22A110002	Washer	1	20	0311026	Scraper 32X40X5/6.5	1
6	Z22A231003	Washer	1	21	Z22AY75001	Cylinder guiding cover	1
7	Z22AY75000	Hydraulic cylinder unit	1	22	0310036	Seal 32X42X7.3	1
8	0210099	Bush 3520F/SF-1	1	23	0305005	Guiding ring 32X5.6X2.5	2
9	0212022	Seeger D.35	1	24	0309039	O-ring 75X3.1	2
10	0203041	Nut M27X2	1	25	Z22AY75100	Cylinder liner	1
11	0204020	Jame nut M27X2	1	26	Z22AY75003	Piston	1
12	0201121	Screw M12X55	8	27	0312015	Gasket 75X55X22.4	1
13	0205013	Washer D.12	16	28	BZ-GZ-001	Restrictor	1
14	0208009	Locking washer D.12	8	29	0303002	90° fitting 1/4	1
15	0203013	Nut M12	8				

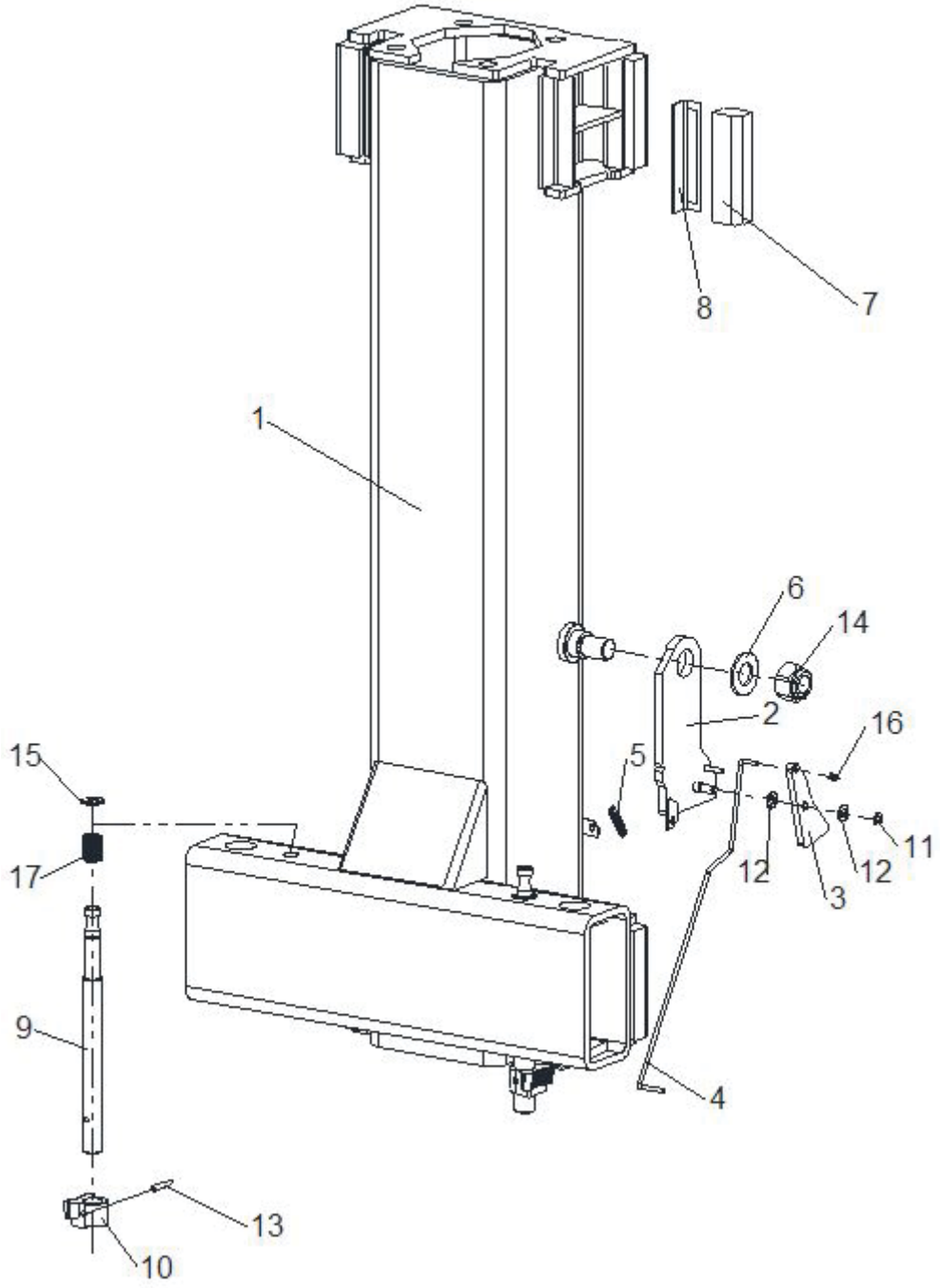

Figure 19 – Carriage Assembly

Item	Part number	Description	Qty	Item	Part number	Description	Qty
1	Z22A211000	Carriage weldment	1	10	Z23A200003	Toothed gear	2
2	Z22A221100	Lock latch	1	11	0211015	Seeger D.8	1
3	Z22A221201	Lock latch lever	1	12	0205011	Washer D.10	2
4	Z22A231001	Lock release rod	1	13	0213052	Elastic pin 6X40	2
5	Z22A231002	Return spring	1	14	0204082	Lelf-locking nut M27X2	1
6	Z22A231003	Washer	1	15	0211014	Seeger D.15	2
7	Z22A241101	Slider	8	16	0204002	Self-locking nut M5	1
8	Z22A242100	Slider shim	8	17	0208019	Spring	2
9	Z22A251101	Lock release pin	2				

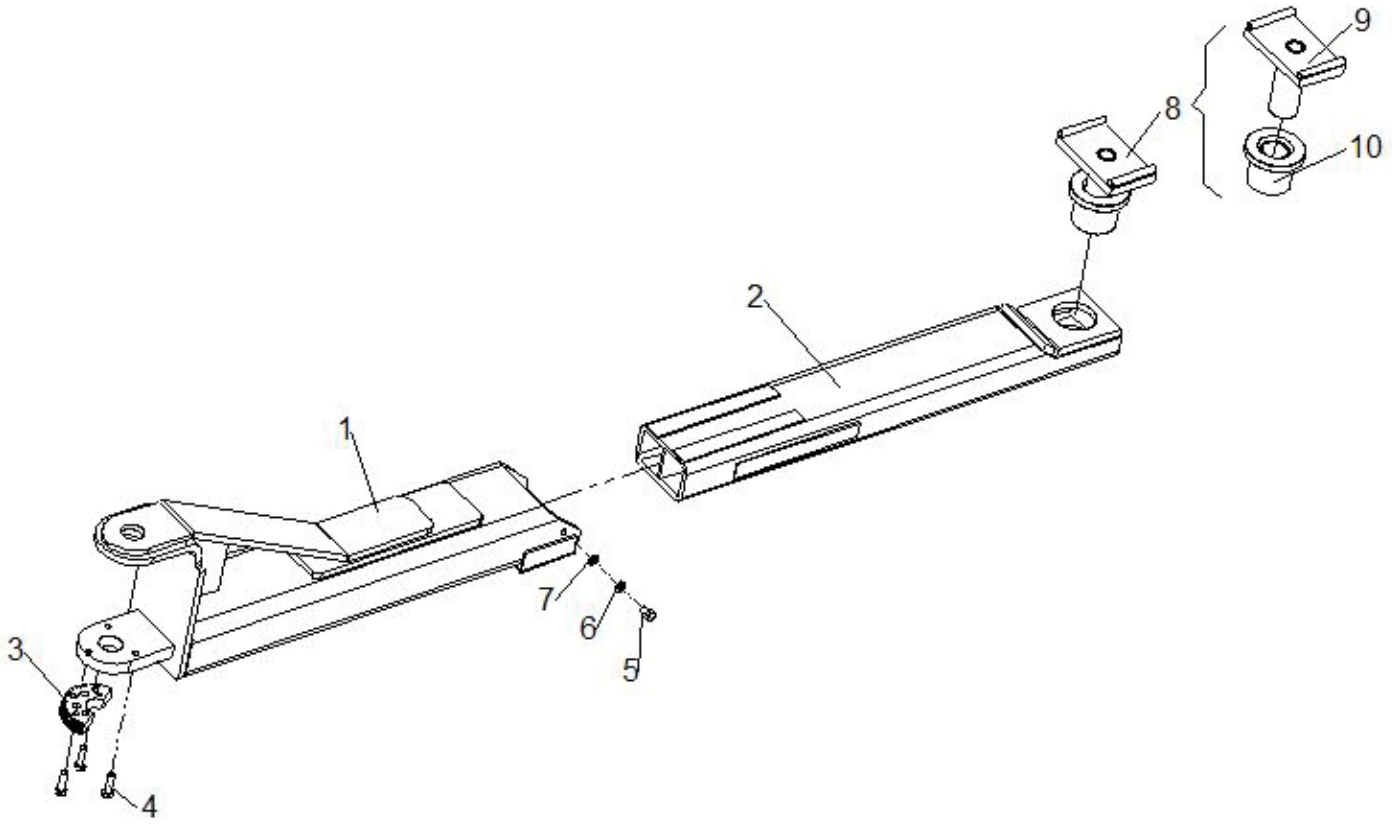

Figure 20 – Arm Assembly And Adaptor Assembly

Item	Part number	Description	Qty	Item	Part number	Description	Qty
1	Z22A311000	Arm frame	1	6	0205011	Washer D.10	1
2	Z22A312000	Telescopic arm	1	7	0211029	Locking washer D.10	1
3	Z23A310001	Anti-rotating gear	1	8	Z22A313000	Adaptor assembly	1
4	0201050	Screw M10X35	3	9	Z22A313100	Adaptor	1
5	0201060	Screw M10X16	1	10	Z22A313001	Thread bush	1

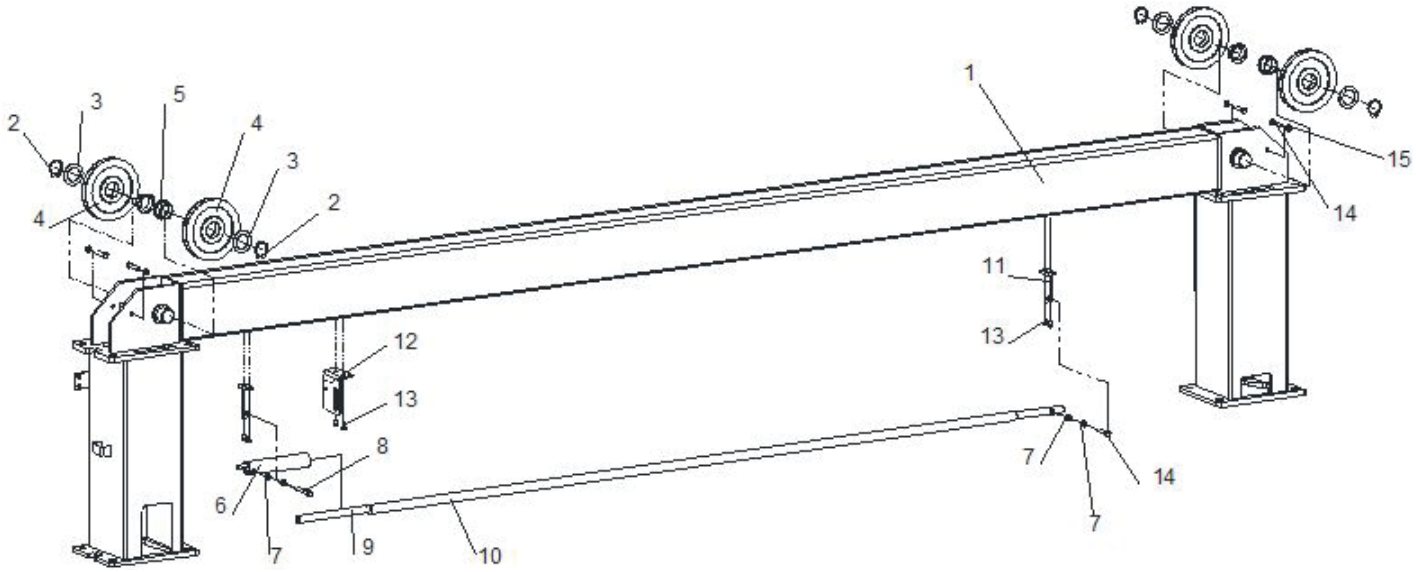

Figure 21 – Overhead Beam Assembly

Item	Part number	Description	Qty	Item	Part number	Description	Qty
1	Z22A411000	Beam weldment	1	9	Z23A400001AM	Crush safety bar	1
2	0212022	Seeger D.35	4	10	Z23A400002	Crush safety bar cover	1
3	Z22A110002	Washer	4	11	SYJ30-17-02M1	Safety bar bracket	2
4	Z22A110001	Pulley	4	12	2L-1-07	Safety bar support	1
5	0210099	Bush 3520F/SF-1	4	13	0206040	Screw M6X12	6
6	SP-1430-14	Overhead switch	1	14	0201033	Screw M8X40	5
7	0203029	Nut M8	4	15	0211030	Toothed washer D.8	4
8	0201020	Screw M8X55	1				

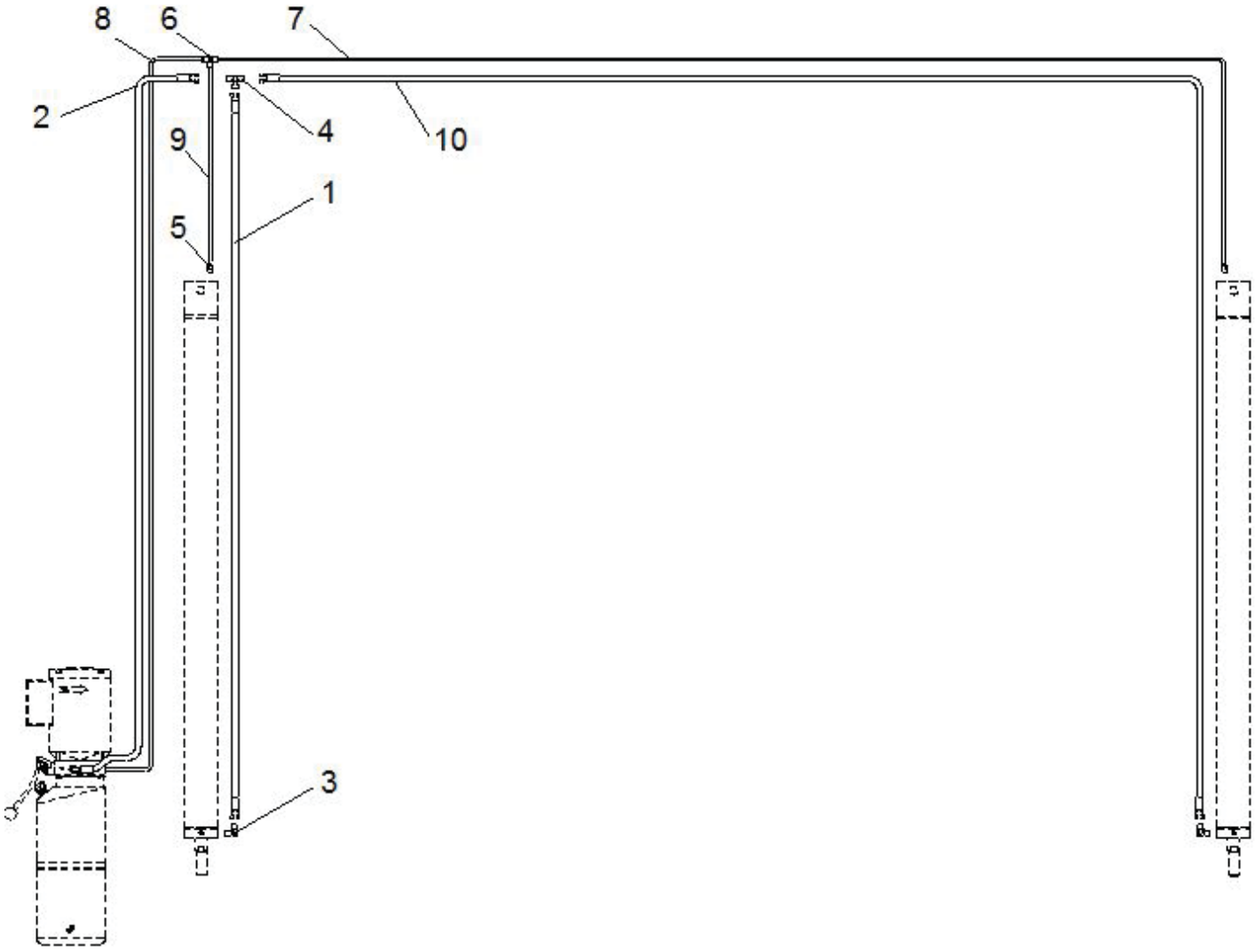

Figure 22 – Hydraulic Line

Item	Part number	Description	Qty
1	ZZ2420	Hydraulic hose 3/8 L=2420	1
2	ZW2850	Hydraulic hose 5/16 L=2850	1
3	0303002	90° fitting 1/4	2
4	0303021	Tee fitting 1/4	1
5	0306144	Quick union 8-1/4	2
6	0306024	Tee quick union 8	1
7	0306096	Rilsan hose 8X5.5 L=4400	1
8	0306096	Rilsan hose 8X5.5 L=3200	1
9	0306096	Rilsan hose 8X5.5 L=1150	1
10	ZZ5640	Hydraulic hose 3/8 L=5640	1

2HP 230V AC HYDRAULIC POWER UNIT WITH POWER UP AND GRAVITY DOWN FUNCTIONS FOR ABOVE GROUND VEHICLE LIFTS

This unit is used for raising and lowering your hoist. A push of a button raises the lift and a manual control allows for controlled lowering. This unit features a fixed pressure relief valve and 3.6 GAL opaque tank.

Electric Schematic

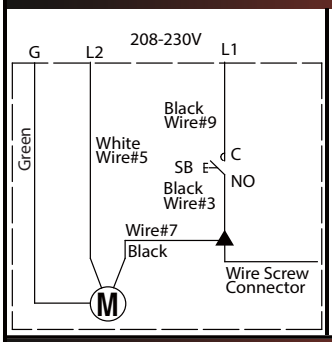

Hydraulic Schematic

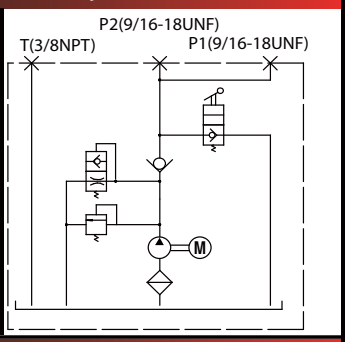

UNIT SPECIFICATION

Lowering Valve	Manual operated
Buffer Valve	Z1/4
Pressure Relief Valve	2300PSI (+/-100PSI) ,Pre-set
Check Valve	M20x1.5
Motor	208-230V,1PH,50/60HZ,2930/3520rpm, 2.0HP, MET recognized/UL 201/CSA 22.2 NO.68
Gear Pump	2.1cc/r 2gpm
Suction Filter	100 mesh
Tank	3.6 gallon, Usable, OPAQUE, Plastic

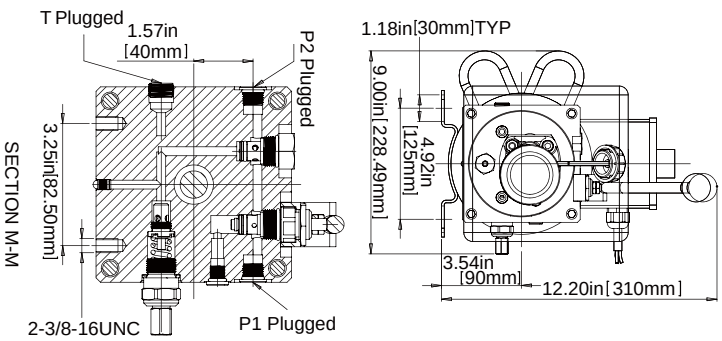

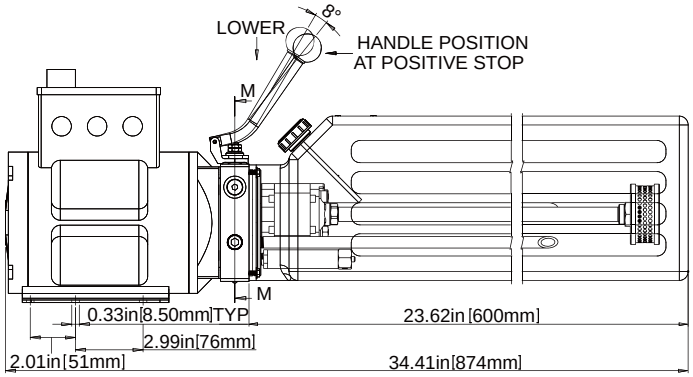

MODEL AL2300

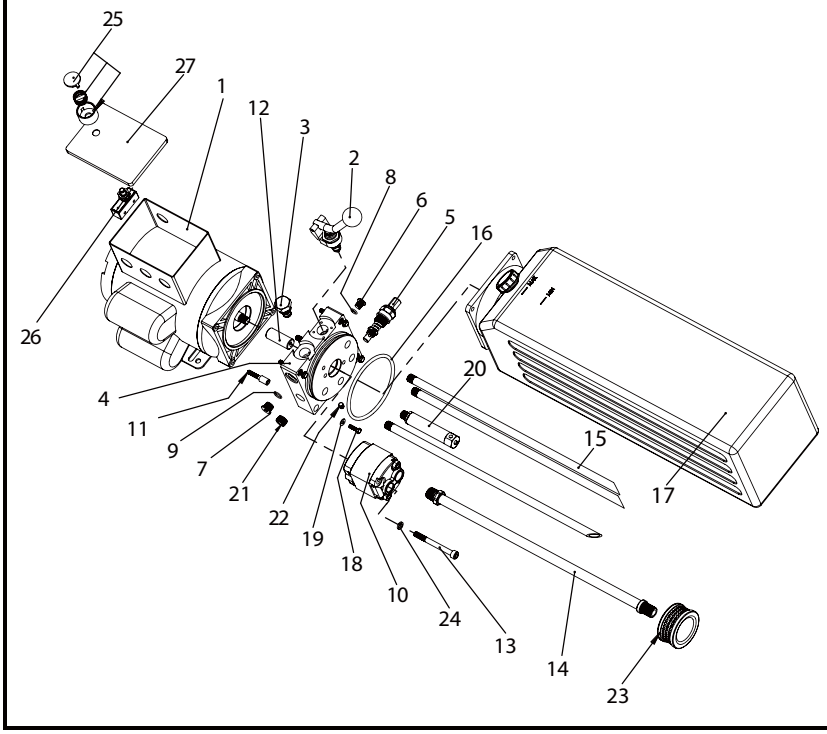

ITEM	DESCRIPTION	P/N	QTY.
1	Motor	WG-03-1G011	1
2	Lowering Valve	WX2-01-4010	1
3	Check Valve	WG-05-1001	1
4	Pump Body	BCP2-01-007	1
5	Pressure Relief Valve	WX2-01-2006	1
6	Plug M10x1	WG-04-3013	1
7	Plug 9/16-18	WG-04-3019	2
8	O-ring 8x2.1	WG-01-2073	1
9	O-ring 11.8x1.8	WG-01-2010	2
10	Gear Pump	CP1-01-007Q2	1
11	Screw	SPZL000100	4
12	Coupling	WX2-04-002	1
13	Pump Mounting Bolt	WG-01-1048	2
14	Suction Tube	WX2-02-1010	1
15	Return Tube	WX2-02-2005	3
16	O-ring 109x5.3	WG-01-2049	1
17	Tank	WG-06-2016	1
18	Hex screws M5x18	WG-01-1260	4
19	Flat washers 5	WG-01-1066	4
20	Buffer valve	WX2-01-6002	1
21	Plug NPT3/8	WG-04-3020	1
22	Ball plug	WG-01-3227	1
23	Filter	WG-07-002	1
24	Lock washers 8	WG-01-1009	2
25	Switch Cover	WG-03-3336	1
26	Motor switch	WG-03-3335	1
27	Junction box cover	WG-03-3337	1

Warranty



Atlas® Platinum Series Two-Post Lifts are warranted for five (5) years on structural components and two (2) years on the hydraulic system, power unit and cylinders effective from date of invoice. Wear items carry a 90-day warranty. Structural components are considered the Carriage, Columns, Yokes, Arms, Runways, Plungers, etc. Hydraulic components are cylinders, hoses, and fittings. Cables, sheaves, latches and controls are considered wear items.

The Manufacturer shall repair or replace at their option for this period those parts returned to the factory freight prepaid or, those inspected by an Atlas Authorized Service Provider which prove after inspection to be defective. This warranty will not apply unless the product is installed, used and maintained in accordance with the Manufacturers installation, operation and maintenance instructions.

This warranty applies to the ORIGINAL purchaser only, and is non-transferable. The warranty covers the products to be free of defects in material and workmanship but, does not cover normal maintenance or adjustments, damage or malfunction caused by: improper handling, installation, abuse, misuse, negligence, carelessness of operation or normal wear and tear. In addition, this warranty does not cover equipment when repairs or alterations have been made or attempted to the Manufacturer's products.

THIS WARRANTY IS EXCLUSIVE AND IS LIEU OF ALL OTHER WARRANTIES EXPRESSED OR IMPLIED INCLUDING ANY IMPLIED WARRANTY OR MERCHANTABILITY OR ANY IMPLIED WARRANTY OF FITNESS FROM A PARTICULAR PURPOSE, AND ALL SUCH IMPLIED WARRANTIES ARE EXPRESSLY EXCLUDED. THE REMEDIES DESCRIBED ARE EXCLUSIVE AND IN NO EVENT SHALL THE MANUFACTURER, NOR ANY SALES AGENT OR OTHER COMPANY AFFILIATED WITH IT OR THEM, BE LIABLE FOR SPECIAL CONSEQUENTIAL OR INCIDENTAL DAMAGES FOR THE BREACH OF OR DELAY IN PERFORMANCE OF THIS WARRANTY. THIS INCLUDES, BUT IS NOT LIMITED TO, LOSS OF PROFIT, RENTAL OR SUBSTITUTE EQUIPMENT OR OTHER COMMERCIAL LOSS.

PRICES: Prices and specifications are subject to change without notice. All orders will be invoiced at prices prevailing at time of shipment. Prices do not include any local, state or federal taxes.

RETURNS: Products may not be returned without prior written approval from the Manufacturer.

DUE TO THE COMPETITIVENESS OF THE SELLING PRICE OF THESE LIFTS, THIS WARRANTY POLICY WILL BE STRICTLY ADMINISTERED AND ADHERED TO.